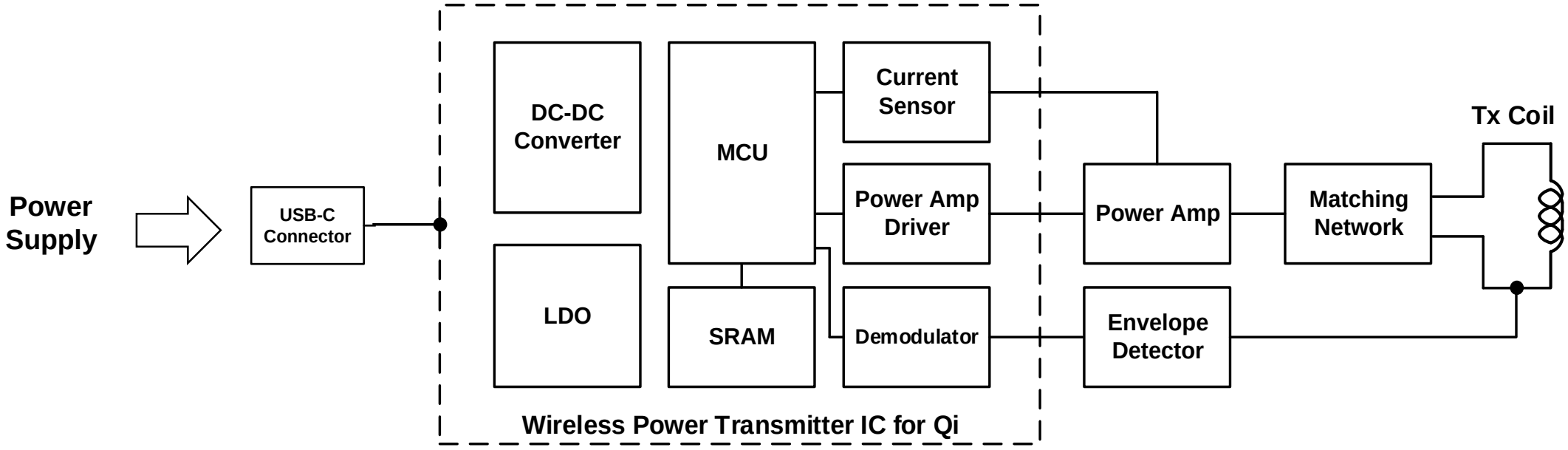
Power Supply
USB-C Connector
DC-DC Converter
LDO
MCU
SRAM
Current Sensor
Power Amp Driver
Demodulator
Wireless Power Transmitter IC for Qi
Power Amp
Envelope Detector
Matching Network
Tx Coil