W5车载支架背面丝印

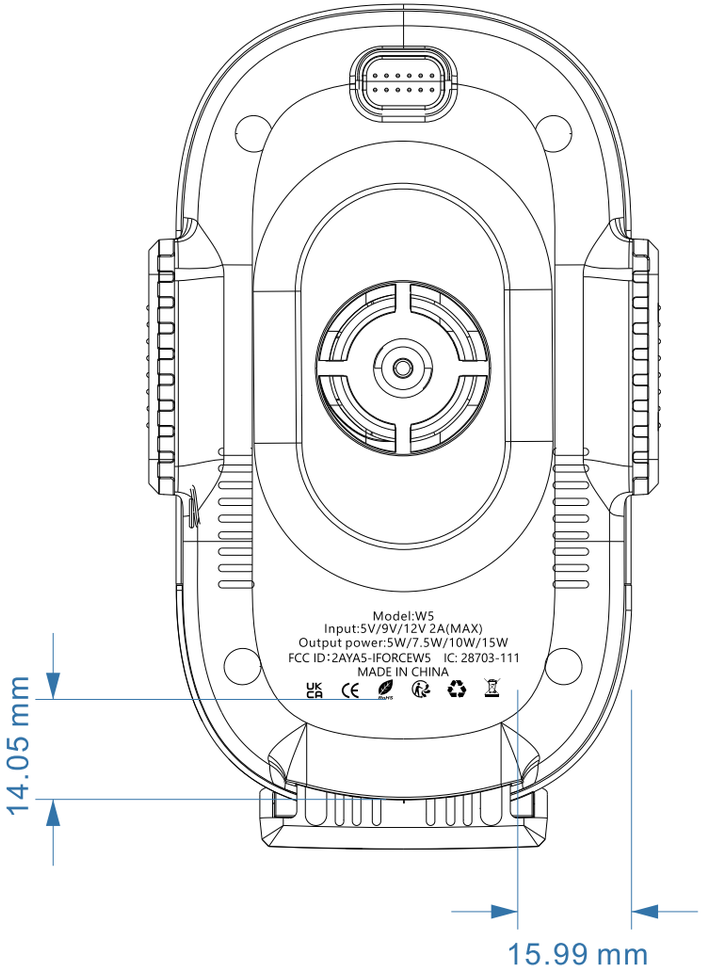
Model:W5
Input:5V/9V/12V 2A(MAX)
Output power:5W/7.5W/10W/15W
FCC ID:2AYA5-IFORCEW5 IC: 28703-111
MADE IN CHINA
14.05 mm
15.99 mm

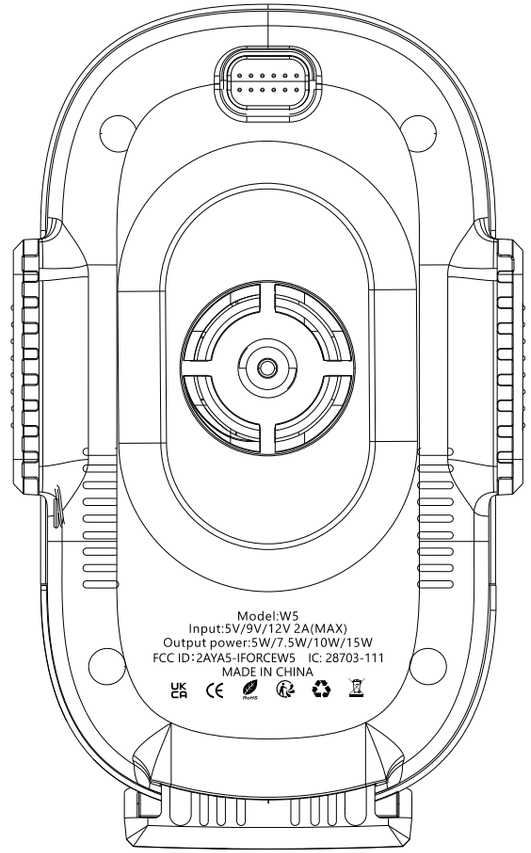
Model:W5
Input:5V/9V/12V 2A(MAX)
Output power:5W/7.5W/10W/15W
FCC ID:2AYA5-IFORCEW5 IC: 28703-111
MADE IN CHINA

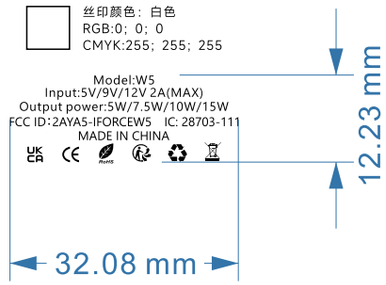
丝印颜色：白色
RGB:0；0；0
CMYK:255；255；255
Model:W5
Input:5V/9V/12V 2A(MAX)
Output power:5W/7.5W/10W/15W
FCC ID:2AYA5-IFORCEW5 IC: 28703-111
MADE IN CHINA
12.23 mm
32.08 mm