承 认 书

SPECIFICATION FOR APPROVAL

客　　户:
CUSTOMER: 深圳市永丰旺科技有限公司
Shenzhen Yongfengwang Technology Co.Ltd

客 户 料 号:
CUST P/N:

煜 耀 料 号:
YUYAO P/N: YY-251166

产品型号:
D E S T: Ø17*0.08*24P*2P*11TS-6.8UH-15mm/43.5*0.8

日　期:
DATE: 2024.5.20

版　本:
VERSION: V1

制　　定 PREPARED BY	审核 CHECKED BY	批准 APPROVED BY	客户承认 CUSTOMER APPROVE
郑少东Shaodong Zheng	姚振东Zhendong Yao	曹前程Qiancheng Chao	

东莞市煜耀电子科技有限公司

Factory Address: Building 21, Xintaiyangcheng industrial park, No.1 xinxinyang Road, Lin Village, Tangxia, Dongguan, China

TEL: 13717089408

FAX: 0769-82866409

DONGGUAN YUYAO ELECTRONIC TECHNOLOGY CO.,LTD

东莞市煜耀电子科技有限公司 TEL: 13717089408 FAX: 0769-82866409 DONGGUAN YUYAO ELECTRONIC TECHNOLOGY CO.,LTD

版本变更履历

Version Change History

版本 Rev	变更前 Before Change	变更后 After Change	变更日期 Change Date	批准 Approved By
A.1	新发行	Newly issued	2024.6.20	

DONGGUAN YUYAO ELECTRONIC TECHNOLOGY CO.,LTD

东莞市煜耀电子科技有限公司 TEL: 13717089408 FAX: 0769-82866409

SPECIFICATION APPROVAL

产品型号: D E S T:	Ø17*0.08*24P*2P*11TS-6.8UH-15mm/43.5*0.8	版 本: VERSION:	V0	客 户: CUSTOMER:	Shenzhen Yongfengwang Technology Co.Ltd
				客户料号: CUST P/N:	0
				煜耀料号: YUYAO P/N:	YY-251166

一、尺寸 DIMENSION:(mm)

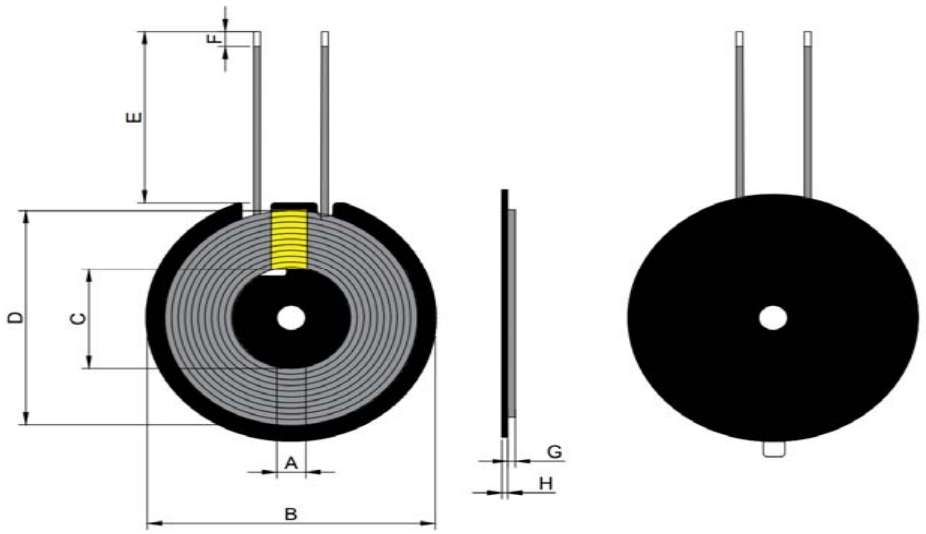

A	5.3±0.3
B	43.5±0.5
C	17±0.5
D	38±1
E	15+2.5/-1
F	3±1.5
G	1.5MAX
H	0.8±0.1
I	
J	
K	
L	

Remarks: two leads are intersected, 7mm high temperature tape is wrapped between the two lines, the back of the magnetic sheet

贴0.1MM 双面胶 0.1 MM double-sided adhesive

2.磁片为43.5*5.3*0.8MMT厚带双槽硬磁 2. The magnetic sheet is 43.5*5.3*0.8MMT thick with double-slot hard magnet.

制定/日期 PREPARED BY/DATE	审核/日期 CHECKED BY/DATE
zheng shao dong/2024.6.20	yao zheng dong/2024.6.20

DONGGUAN YUYAO ELECTRONIC TECHNOLOGY CO.,LTD

东莞市煜耀电子科技有限公司 TEL: 13717089408 FAX: 0769-82866409

SPECIFICATION APPROVAL

产品型号: D E S T:	Ø17*0.08*24P*2P*11TS-6.8UH-15mm/43.5*0.8	版 本: VERSION:	V0	客 户: CUSTOMER:	Shenzhen Yongfengwang Technology Co.Ltd
				客户料号: CUST P/N:	0
				煜耀料号: YUYAO P/N:	YY-251166

二、原理图 SCHEMATIC DIAGRAM:

三、绕线参数 WINDING SPECIFICATION:

序号 NO	端子 TERMINAL		线径 WIRE	圈数 TURNS	绕线方向 WINDING DIRECTION
1	S	F	0.08*24P*2P热风自粘线	11TS	逆时针

四、电气特性 ELECTRICAL CHARACTERISTICS:

温度 TEMPERATURE:25℃±10℃,湿度 RELATIVE HUMIDITY:65±20％

序号 NO	项目 ITEM	端子 TERMINAL	标准 SPECIFICATION	测试条件 TEST FREQUENCY	测试仪器 TEST EQUIPMENTS
1	IND	S-F	3.8UH±10％单线圈	100KHZ/1V	LCZ METER1062B
2	IND	S-F	6.5-6.8UH带磁片	100KHZ/1V	LCZ METER1062B
3	DCR	S-F	75mΩ MAX	1KHZ/1V	TH2810
4	Q值	S-F	33MIN	100KHZ/1V	LCZ METER1062B

制定/日期 PREPARED BY/DATE	审核/日期 CHECKED BY/DATE
zheng shao dong/2024.6.20	yao zheng dong/2024.6.20

DONGGUAN YUYAO ELECTRONIC TECHNOLOGY CO.,LTD

东莞市煜耀电子科技有限公司 TEL: 13717089408 FAX: 0769-82866409