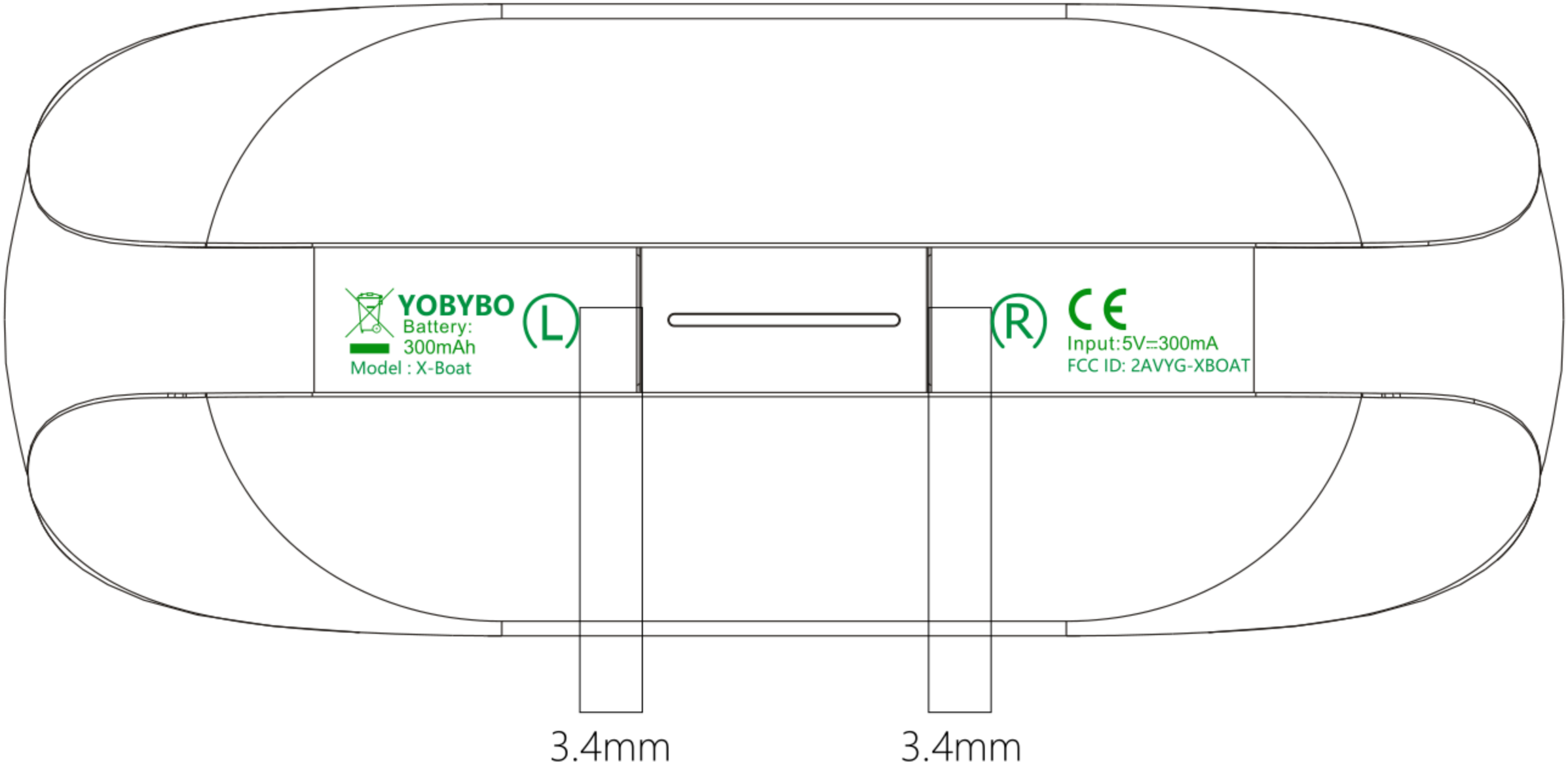
YOBYBO
Battery:
300mAh
Model : X-Boat
L
R
CE
Input:5V⎓300mA
FCC ID: 2AVYG-XBOAT
3.4mm
3.4mm