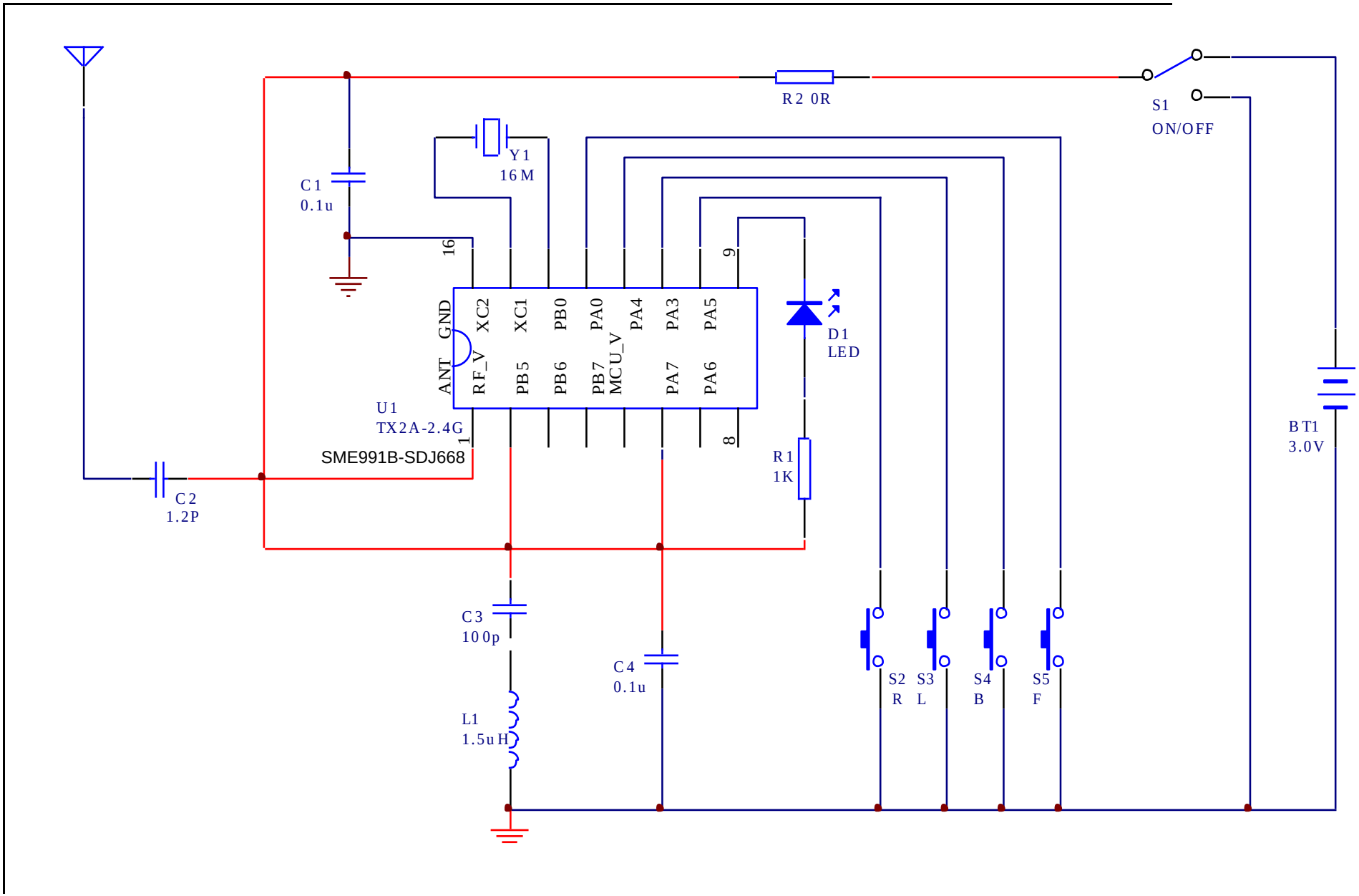
R2 0R
S1
ON/OFF
Y1
16M
C1
0.1u
16
9
GND
XC2
XC1
PB0
PA0
PA4
PA3
PA5
ANT
RF_V
PB5
PB6
PB7
MCU_V
PA7
PA6
D1
LED
U1
TX2A-2.4G
1
8
SME991B-SDJ668
R1
1K
BT1
3.0V
C2
1.2P
C3
100p
C4
0.1u
L1
1.5uH
S2
R
S3
L
S4
B
S5
F