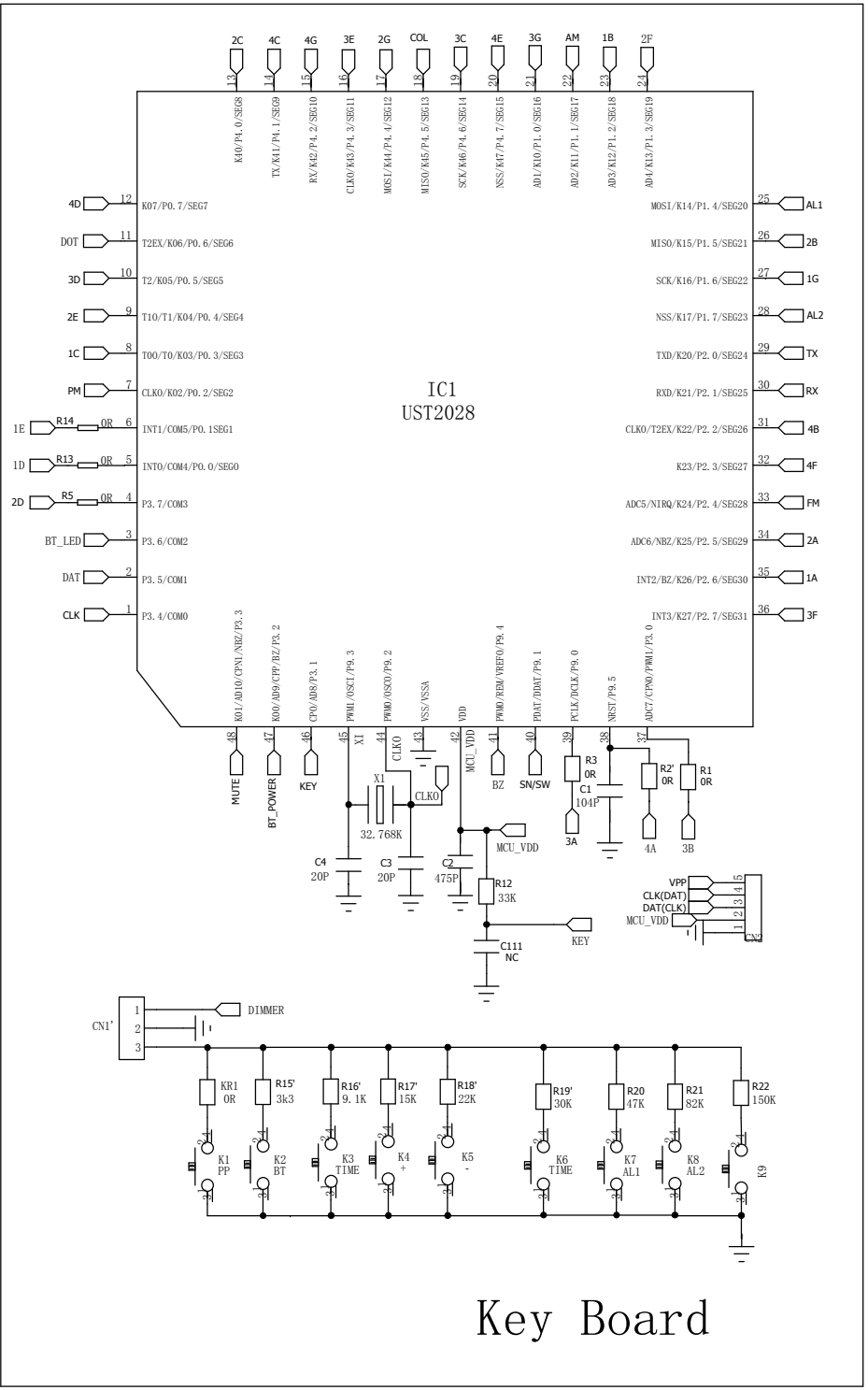
IC1
UST2028
Key Board
DIMMER
KEY
MCU_VDD
VPP
CLK(DAT)
DAT(CLK)
CN2
CN1'
KR1 0R
R15' 3k3
R16' 9.1K
R17' 15K
R18' 22K
R19' 30K
R20 47K
R21 82K
R22 150K
K1 PP
K2 BT
K3 TIME
K4 +
K5 -
K6 TIME
K7 AL1
K8 AL2
K9

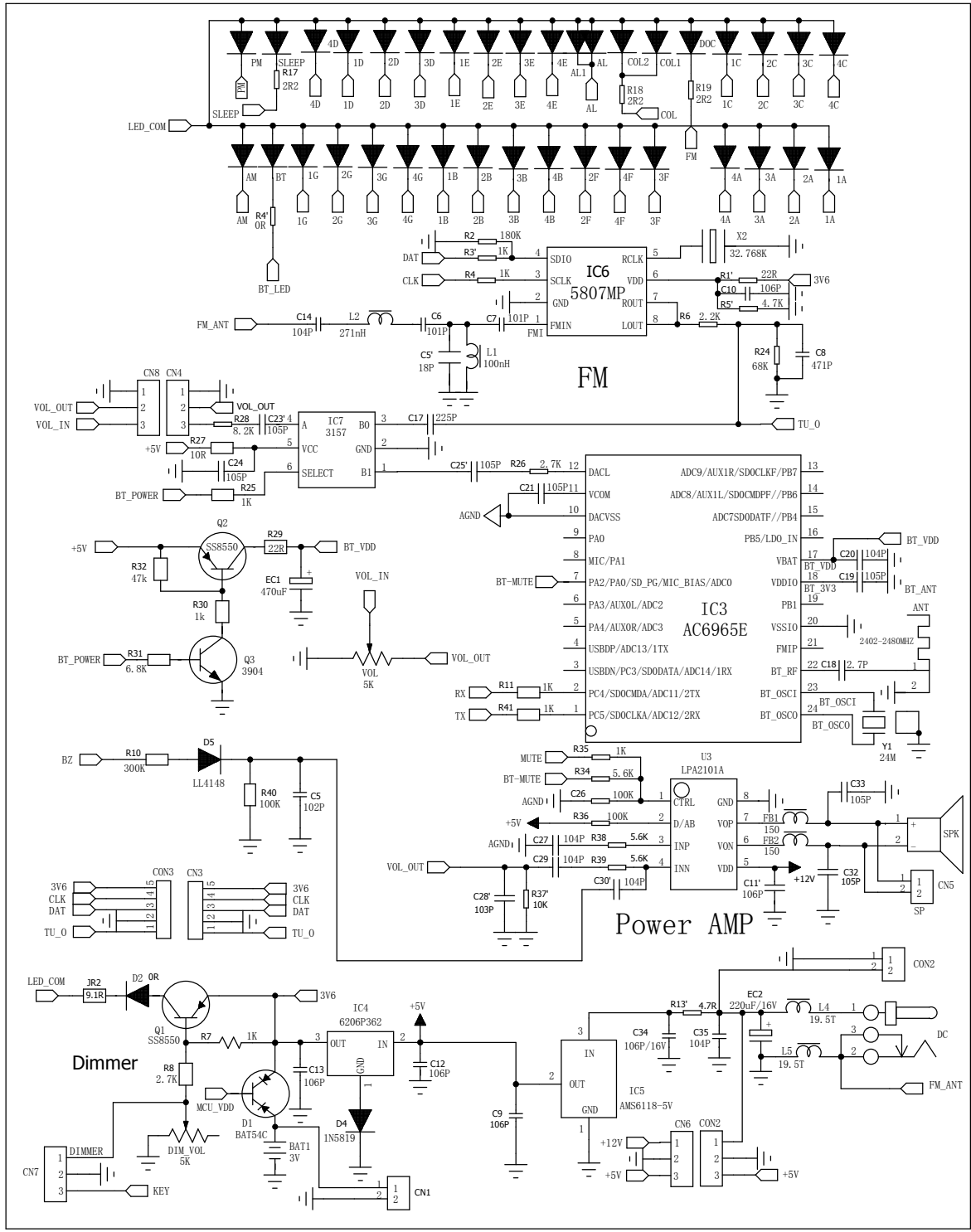
FM
IC6
5807MP
IC7
3157
IC3
AC6965E
Power AMP
U3
LPA2101A
Dimmer
IC4
6206P362
IC5
AMS6118-5V
LED_COM
VOL_OUT
VOL_IN
TU_0
BT_VDD
BT_ANT
BT_POWER
BT_LED
FM_ANT
SPK
CN5
CN2
CN6
CN7
CN1
DC
KEY

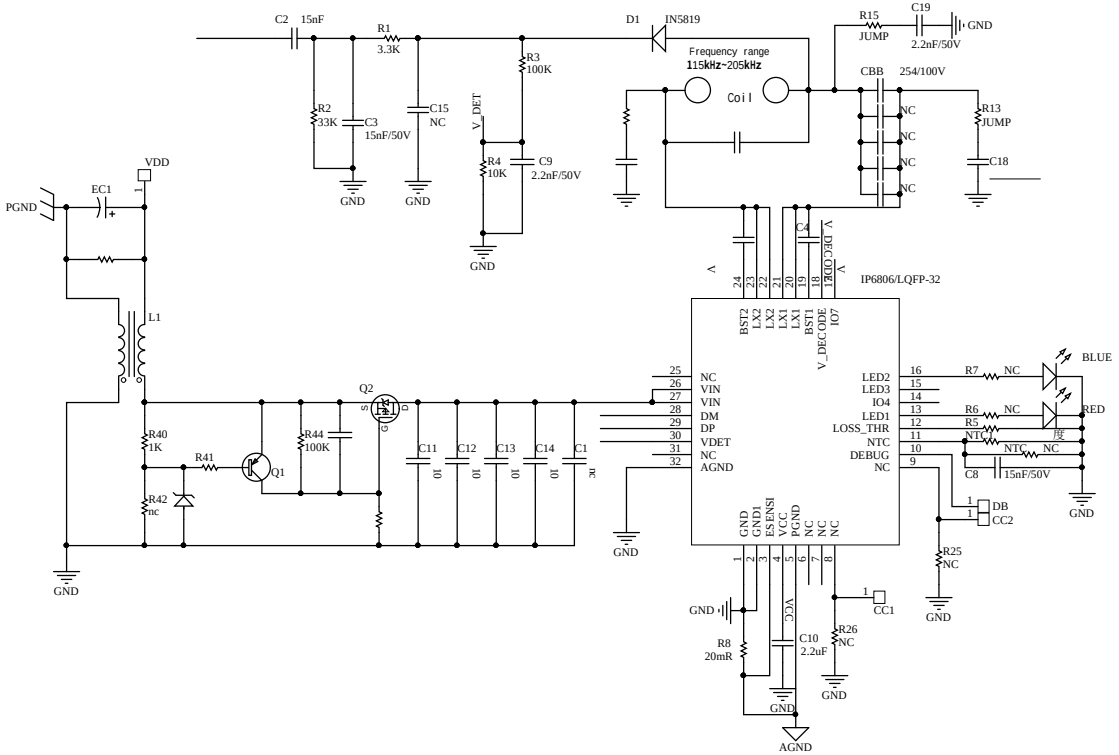

Title		
Size A4	Number	Revision
Date: 2023/10/17	Sheet of	
File: -V3.SchDoc		