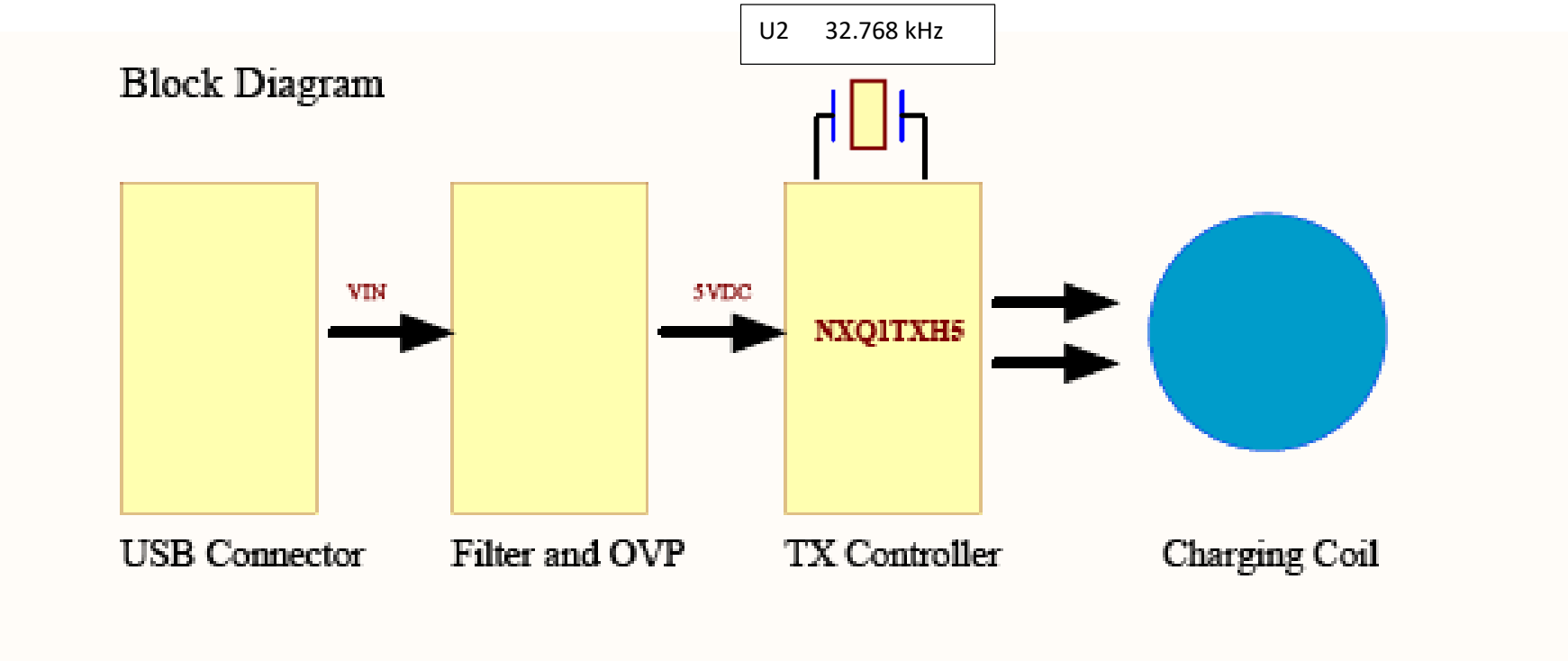
U2 32.768 kHz
Block Diagram
VIN
5VDC
NXQ1TXH5
USB Connector
Filter and OVP
TX Controller
Charging Coil