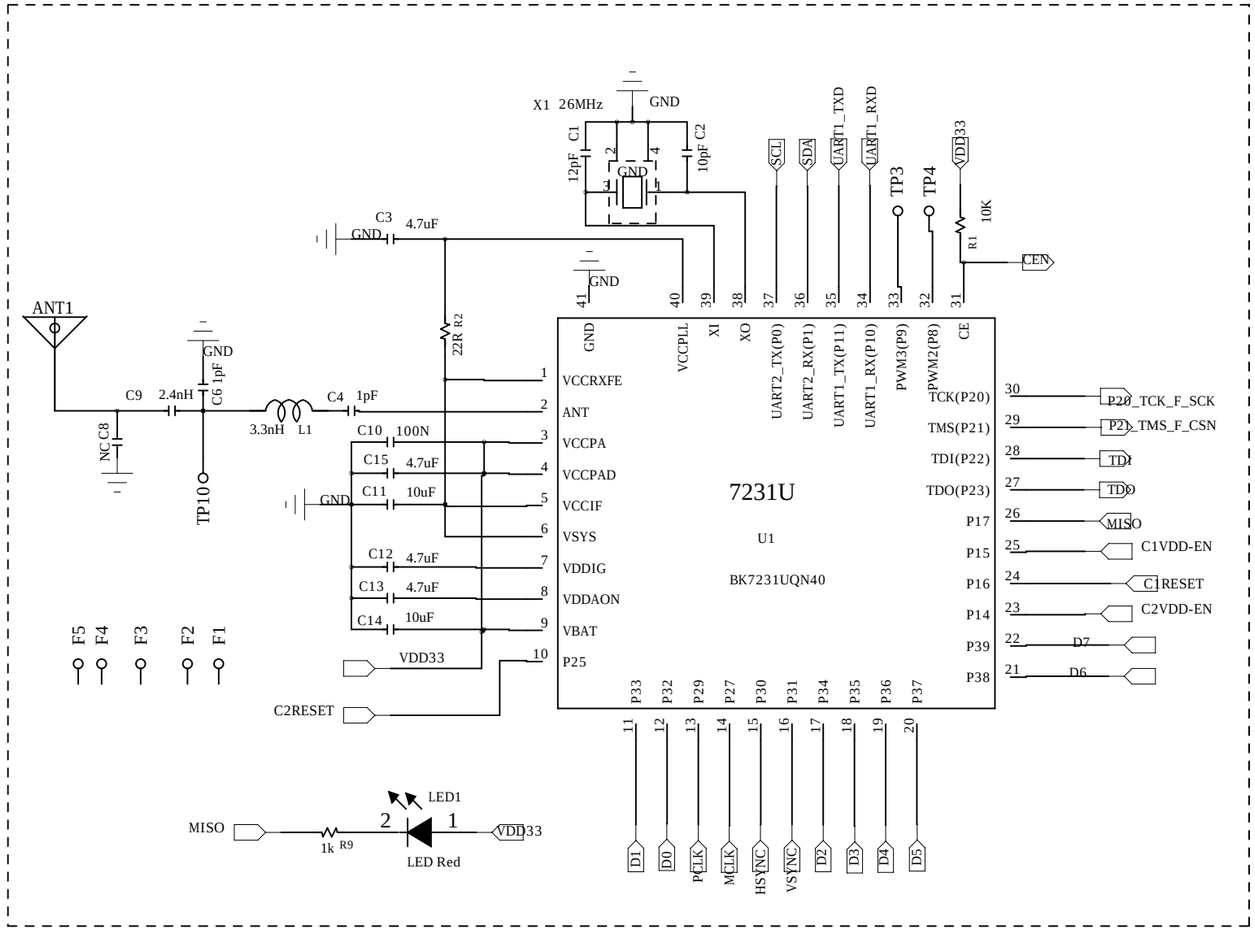
7231U
U1
BK7231UQN40
X1 26MHz
ANT1
LED1
LED Red
MISO
C2RESET
VDD33
GND
CEN
TP3
TP4
TP10
TP11
TP12
TP13
TP14
TP15
TP16
F1
F2
F3
F4
F5
D1
D0
PCLK
MCLK
HSYNC
VSYNC
D2
D3
D4
D5
D6
D7
P20_TCK_F_SCK
P21_TMS_F_CSN
TDI
TDO
MISO
C1VDD-EN
C1RESET
C2VDD-EN
SCL
SDA
UART1_TXD
UART1_RXD

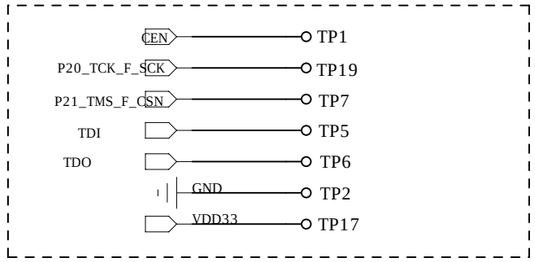
CEN
P20_TCK_F_SCK
P21_TMS_F_CSN
TDI
TDO
GND
VDD33
TP1
TP19
TP7
TP5
TP6
TP2
TP17

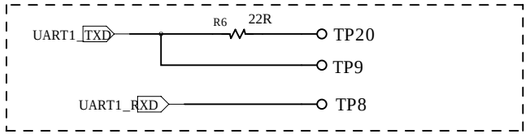
UART1_TXD
UART1_RXD
R6 22R
TP20
TP9
TP8

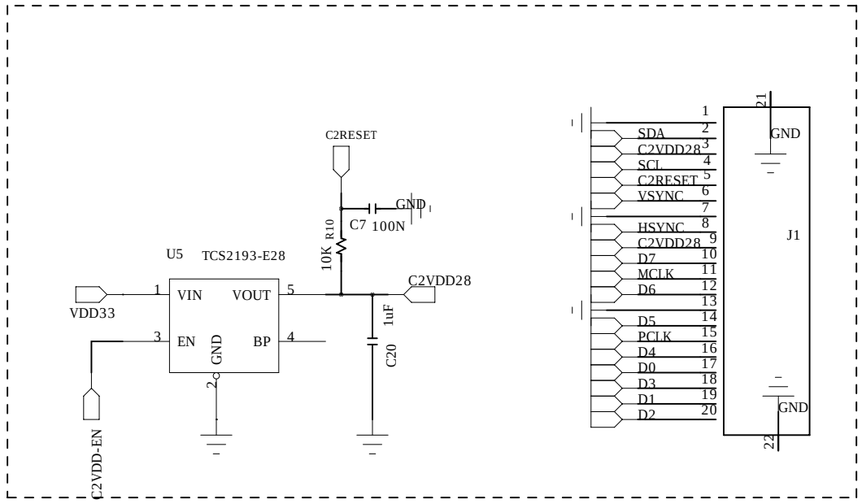
U5 TCS2193-E28
VIN
VOUT
EN
GND
BP
VDD33
C2VDD28
C2VDD-EN
C2RESET
C7 100N
R10 10K
C20 1uF
J1
SDA
SCL
VSYNC
HSYNC
MCLK
PCLK
GND

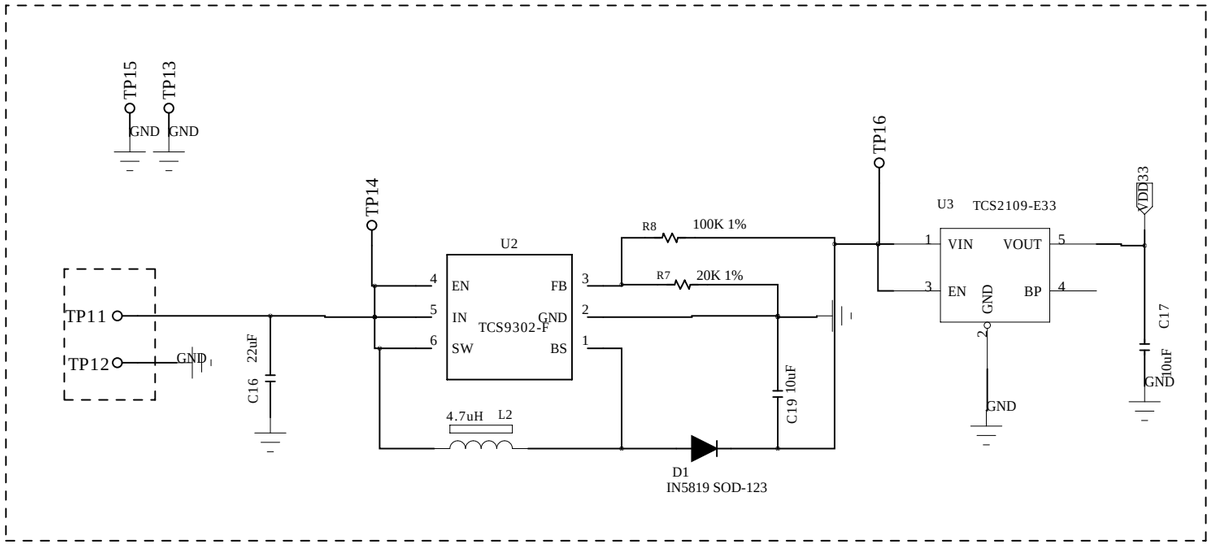
TP15
TP13
TP14
TP16
TP11
TP12
U2
TCS9302-F
EN
IN
SW
FB
GND
BS
R8 100K 1%
R7 20K 1%
C16 22uF
C19 10uF
4.7uH L2
D1
IN5819 SOD-123
U3 TCS2109-E33
VIN
VOUT
EN
GND
BP
VDD33
C17 10uF
GND

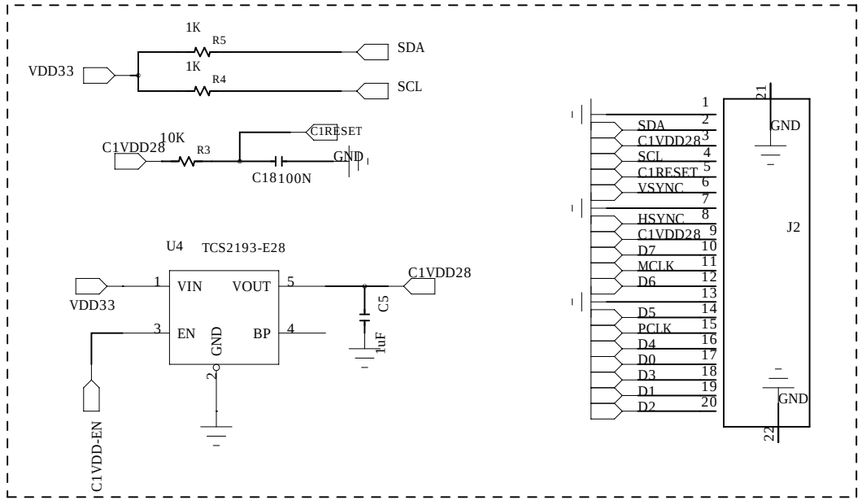
VDD33
R5 1K
R4 1K
SDA
SCL
C1VDD28
R3 10K
C1RESET
C18100N
U4 TCS2193-E28
VIN
VOUT
EN
GND
BP
C5 1uF
C1VDD-EN
J2
SDA
SCL
VSYNC
HSYNC
MCLK
PCLK
GND

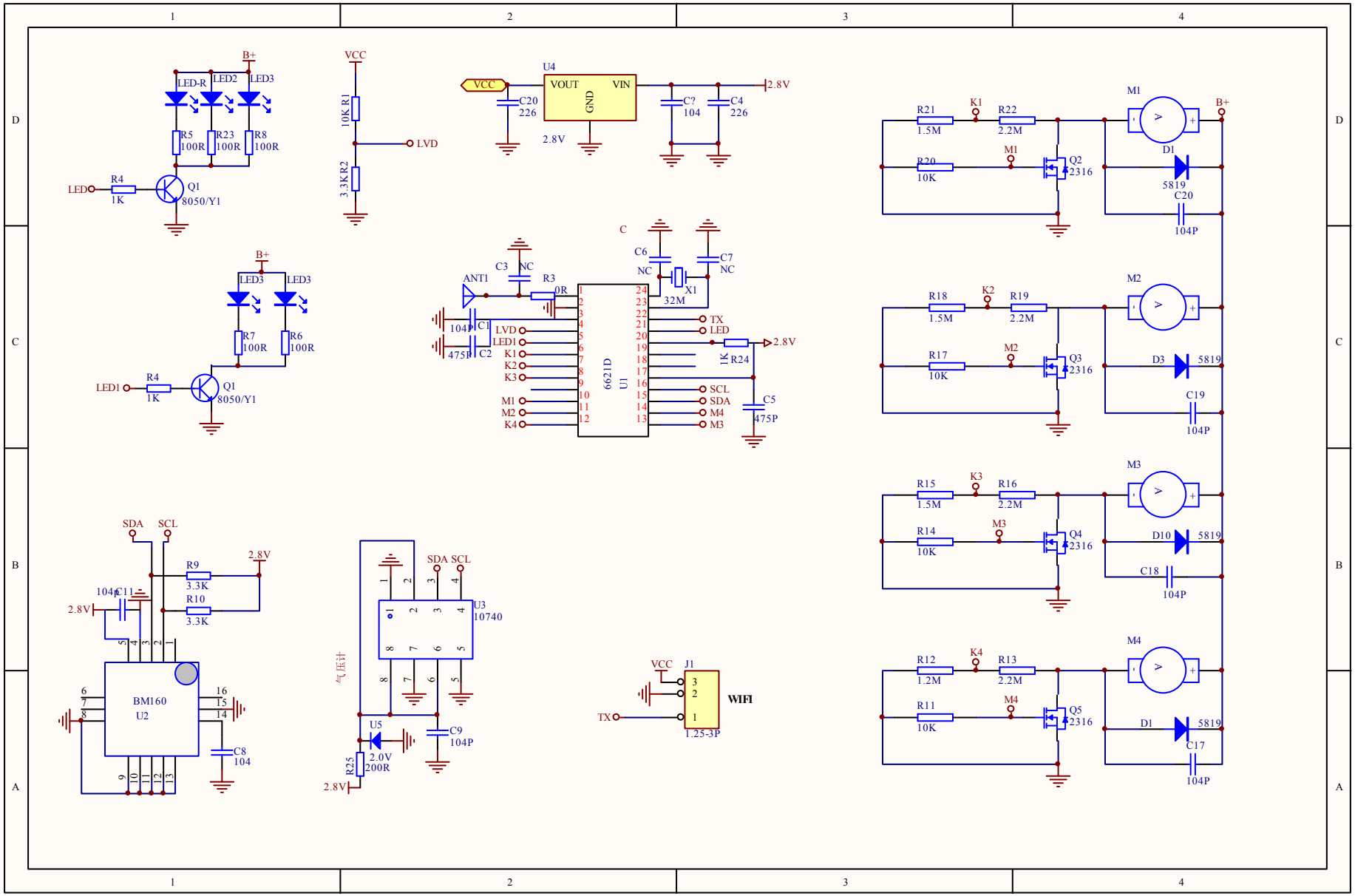
B+
LED-R
LED2
LED3
R5 100R
R23 100R
R8 100R
LED
R4 1K
Q1 8050/Y1
VCC
10K R1
LVD
3.3K R2
U4
VOUT
VIN
GND
VCC
C20 226
2.8V
C? 104
C4 226
2.8V
LED3
LED3
R7 100R
R6 100R
LED1
R4 1K
Q1 8050/Y1
C
C3 NC
ANT1
R3 0R
C6 NC
C7 NC
X1 32M
104P C1
475P C2
LVD
LED1
K1
K2
K3
M1
M2
K4
6621D
U1
TX
LED
1K R24
2.8V
SCL
SDA
M4
M3
C5 475P
SDA
SCL
2.8V
R9 3.3K
R10 3.3K
104P C11
2.8V
BM160
U2
C8 104
SDA SCL
U3 10740
气压计
U5
2.0V 200R
R25
2.8V
C9 104P
VCC
J1
TX
1.25-3P
WIFI
R21 1.5M
K1
R22 2.2M
R20 10K
M1
Q2 2316
M1
D1 5819
C20 104P
R18 1.5M
K2
R19 2.2M
R17 10K
M2
Q3 2316
M2
D3 5819
C19 104P
R15 1.5M
K3
R16 2.2M
R14 10K
M3
Q4 2316
M3
D10 5819
C18 104P
R12 1.2M
K4
R13 2.2M
R11 10K
M4
Q5 2316
M4
D1 5819
C17 104P