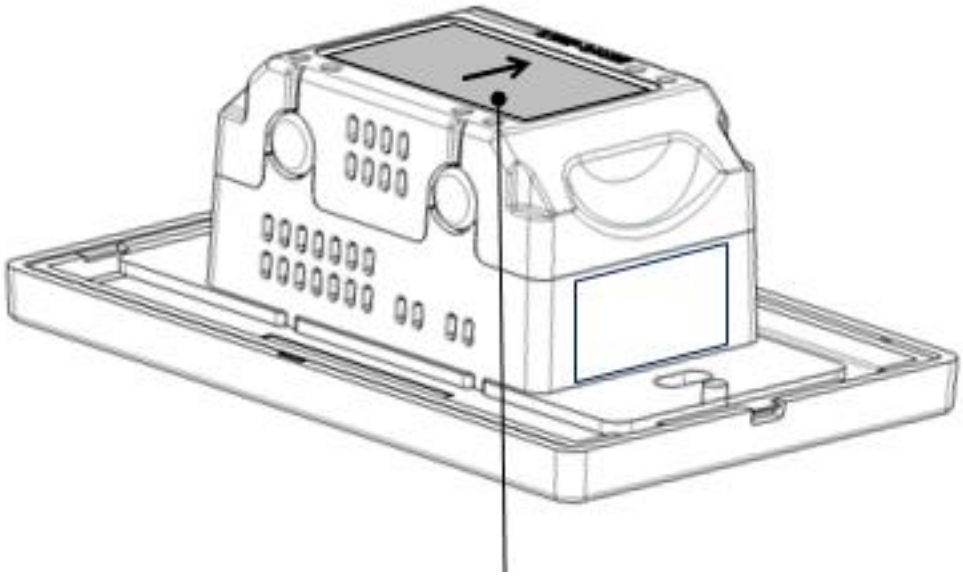

size: 43.2*26.5mm