EUT Label Placement

Model: WSDU

This document may not be copied or reproduced (reprinted) without written consent by EMCE Engineering, Inc.

EMCE Engineering, Inc., 1726 Ringwood Avenue, San Jose, CA 95131, USA
TEL: +1-510-933-8848 FAX: +1-510-933-8849

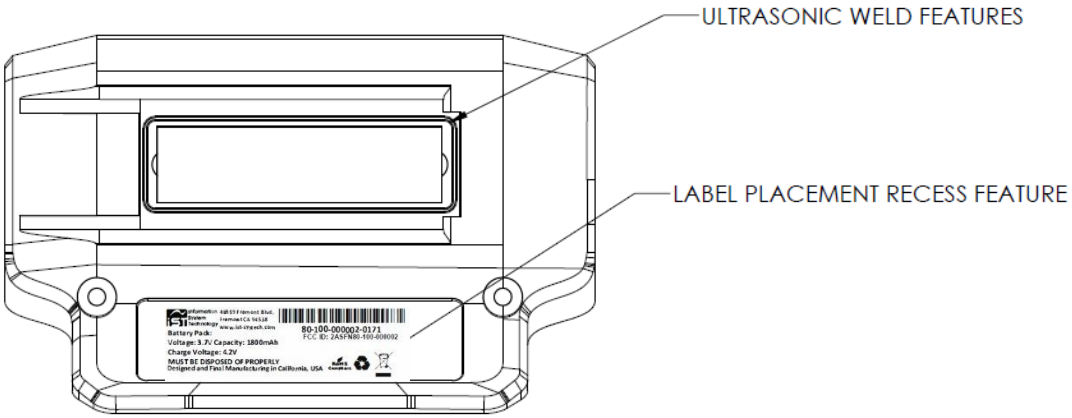

This document may not be copied or reproduced (reprinted) without written consent by EMCE Engineering, Inc.
EMCE Engineering, Inc., 1726 Ringwood Avenue, San Jose, CA 95131, USA
TEL: +1-510-933-8848 FAX: +1-510-933-8849