APPENDIX C: PROBE & DIPOLE ANTENNA CALIBRATION

ONETECH Corp.: 43-14, Jinsaegol-gil, Chowol-eup, Gwangju-si, Gyeonggi-do, 12735, Korea (TEL: 82-31-799-9500, FAX: 82-31-799-9599)

Calibration Laboratory of
Schmid & Partner
Engineering AG
Zeughausstrasse 43, 8004 Zurich, Switzerland

S Schweizerischer Kalibrierdienst
C Service suisse d'étalonnage
Servizio svizzero di taratura
S Swiss Calibration Service

Accredited by the Swiss Accreditation Service (SAS)
The Swiss Accreditation Service is one of the signatories to the EA Multilateral Agreement for the recognition of calibration certificates

Accreditation No.: SCS 0108

Client **Onetech (Dymstec)**

Certificate No: EX3-3832_Feb19

CALIBRATION CERTIFICATE

Object	EX3DV4 - SN:3832
Calibration procedure(s)	QA CAL-01.v9, QA CAL-12.v9, QA CAL-14.v5, QA CAL-23.v5, QA CAL-25.v7 Calibration procedure for dosimetric E-field probes
Calibration date	February 27, 2019

This calibration certificate documents the traceability to national standards, which realize the physical units of measurements (SI). The measurements and the uncertainties with confidence probability are given on the following pages and are part of the certificate.

All calibrations have been conducted in the closed laboratory facility: environment temperature (22 ± 3)°C and humidity < 70%.

Calibration Equipment used (M&TE critical for calibration)

Primary Standards	ID	Cal Date (Certificate No.)	Scheduled Calibration
Power meter NRP	SN: 104778	04-Apr-18 (No. 217-02672/02673)	Apr-19
Power sensor NRP-Z91	SN: 103244	04-Apr-18 (No. 217-02672)	Apr-19
Power sensor NRP-Z91	SN: 103245	04-Apr-18 (No. 217-02673)	Apr-19
Reference 20 dB Attenuator	SN: S5277 (20x)	04-Apr-18 (No. 217-02682)	Apr-19
DAE4	SN: 660	19-Dec-18 (No. DAE4-660_Dec18)	Dec-19
Reference Probe ES3DV2	SN: 3013	31-Dec-18 (No. ES3-3013_Dec18)	Dec-19
Secondary Standards	**ID**	**Check Date (in house)**	**Scheduled Check**
Power meter E4419B	SN: GB41293874	06-Apr-16 (in house check Jun-18)	In house check: Jun-20
Power sensor E4412A	SN: MY41498087	06-Apr-16 (in house check Jun-18)	In house check: Jun-20
Power sensor E4412A	SN: 000110210	06-Apr-16 (in house check Jun-18)	In house check: Jun-20
RF generator HP 8648C	SN: US3642U01700	04-Aug-99 (in house check Jun-18)	In house check: Jun-20
Network Analyzer E8358A	SN: US41080477	31-Mar-14 (in house check Oct-18)	In house check: Oct-19

	Name	Function	Signature
Calibrated by:	Claudio Leubler	Laboratory Technician	
Approved by:	Katja Pokovic	Technical Manager	

Issued: February 28, 2019

This calibration certificate shall not be reproduced except in full without written approval of the laboratory.

ONETECH Corp.: 43-14, Jinsaegol-gil, Chowol-eup, Gwangju-si, Gyeonggi-do, 12735, Korea (TEL: 82-31-799-9500, FAX: 82-31-799-9599)

Calibration Laboratory of
Schmid & Partner
Engineering AG
Zeughausstrasse 43, 8004 Zurich, Switzerland

S Schweizerischer Kalibrierdienst
C Service suisse d'étalonnage
S Servizio svizzero di taratura
Swiss Calibration Service

Accredited by the Swiss Accreditation Service (SAS)
The Swiss Accreditation Service is one of the signatories to the EA Multilateral Agreement for the recognition of calibration certificates

Accreditation No.: **SCS 0108**

Glossary:

TSL	tissue simulating liquid
NORMx,y,z	sensitivity in free space
ConvF	sensitivity in TSL / NORMx,y,z
DCP	diode compression point
CF	crest factor (1/duty_cycle) of the RF signal
A, B, C, D	modulation dependent linearization parameters
Polarization φ	φ rotation around probe axis
Polarization ϑ	ϑ rotation around an axis that is in the plane normal to probe axis (at measurement center), i.e., ϑ = 0 is normal to probe axis
Connector Angle	information used in DASY system to align probe sensor X to the robot coordinate system

Calibration is Performed According to the Following Standards:

a) IEEE Std 1528-2013, "IEEE Recommended Practice for Determining the Peak Spatial-Averaged Specific Absorption Rate (SAR) in the Human Head from Wireless Communications Devices: Measurement Techniques", June 2013
b) IEC 62209-1, ", "Measurement procedure for the assessment of Specific Absorption Rate (SAR) from hand-held and body-mounted devices used next to the ear (frequency range of 300 MHz to 6 GHz)", July 2016
c) IEC 62209-2, "Procedure to determine the Specific Absorption Rate (SAR) for wireless communication devices used in close proximity to the human body (frequency range of 30 MHz to 6 GHz)", March 2010
d) KDB 865664, "SAR Measurement Requirements for 100 MHz to 6 GHz"

Methods Applied and Interpretation of Parameters:

- *NORMx,y,z:* Assessed for E-field polarization ϑ = 0 (f ≤ 900 MHz in TEM-cell; f > 1800 MHz: R22 waveguide) NORMx,y,z are only intermediate values, i.e., the uncertainties of NORMx,y,z does not affect the E^2-field uncertainty inside TSL (see below *ConvF*).
- *NORM(f)x,y,z = NORMx,y,z * frequency_response* (see Frequency Response Chart). This linearization is implemented in DASY4 software versions later than 4.2. The uncertainty of the frequency response is included in the stated uncertainty of *ConvF*.
- *DCPx,y,z:* DCP are numerical linearization parameters assessed based on the data of power sweep with CW signal (no uncertainty required). DCP does not depend on frequency nor media.
- *PAR:* PAR is the Peak to Average Ratio that is not calibrated but determined based on the signal characteristics
- *Ax,y,z; Bx,y,z; Cx,y,z; Dx,y,z; VRx,y,z: A, B, C, D* are numerical linearization parameters assessed based on the data of power sweep for specific modulation signal. The parameters do not depend on frequency nor media. *VR* is the maximum calibration range expressed in RMS voltage across the diode.
- *ConvF and Boundary Effect Parameters:* Assessed in flat phantom using E-field (or Temperature Transfer Standard for f ≤ 800 MHz) and inside waveguide using analytical field distributions based on power measurements for f > 800 MHz. The same setups are used for assessment of the parameters applied for boundary compensation (alpha, depth) of which typical uncertainty values are given. These parameters are used in DASY4 software to improve probe accuracy close to the boundary. The sensitivity in TSL corresponds to *NORMx,y,z * ConvF* whereby the uncertainty corresponds to that given for *ConvF*. A frequency dependent *ConvF* is used in DASY version 4.4 and higher which allows extending the validity from ± 50 MHz to ± 100 MHz.
- *Spherical isotropy (3D deviation from isotropy)*: in a field of low gradients realized using a flat phantom exposed by a patch antenna.
- *Sensor Offset:* The sensor offset corresponds to the offset of virtual measurement center from the probe tip (on probe axis). No tolerance required.
- *Connector Angle:* The angle is assessed using the information gained by determining the *NORMx* (no uncertainty required).

ONETECH Corp.: 43-14, Jinsaegol-gil, Chowol-eup, Gwangju-si, Gyeonggi-do, 12735, Korea (TEL: 82-31-799-9500, FAX: 82-31-799-9599)

DASY/EASY - Parameters of Probe: EX3DV4 - SN:3832

Basic Calibration Parameters

	Sensor X	Sensor Y	Sensor Z	Unc (k=2)
Norm (µV/(V/m)^2)[A]	0.44	0.44	0.57	± 10.1 %
DCP (mV)[B]	102.1	100.2	103.5	

Calibration Results for Modulation Response

UID	Communication System Name		A dB	B dB√µV	C	D dB	VR mV	Max dev.	Max Unc[E] (k=2)
0	CW	X	0.00	0.00	1.00	0.00	169.1	± 3.0 %	± 4.7 %
		Y	0.00	0.00	1.00		173.6		
		Z	0.00	0.00	1.00		179.5		
10352-AAA	Pulse Waveform (200Hz, 10%)	X	15.00	89.07	21.38	10.00	60.0	± 3.1 %	± 9.6 %
		Y	15.00	87.73	20.50		60.0		
		Z	15.00	89.44	21.20		60.0		
10353-AAA	Pulse Waveform (200Hz, 20%)	X	15.00	89.92	20.56	6.99	80.0	± 1.4 %	± 9.6 %
		Y	15.00	88.37	19.36		80.0		
		Z	15.00	90.51	20.71		80.0		
10354-AAA	Pulse Waveform (200Hz, 40%)	X	15.00	94.87	21.54	3.98	95.0	± 1.2 %	± 9.6 %
		Y	15.00	88.99	17.91		95.0		
		Z	15.00	93.51	20.83		95.0		
10355-AAA	Pulse Waveform (200Hz, 60%)	X	15.00	102.17	23.57	2.22	120.0	± 1.2 %	± 9.6 %
		Y	15.00	86.53	15.16		120.0		
		Z	15.00	98.09	21.67		120.0		
10387-AAA	QPSK Waveform, 1 MHz	X	0.99	65.97	12.03	0.00	150.0	± 2.9 %	± 9.6 %
		Y	0.55	60.00	7.27		150.0		
		Z	0.80	63.14	10.24		150.0		
10388-AAA	QPSK Waveform, 10 MHz	X	2.55	70.66	17.17	0.00	150.0	± 1.3 %	± 9.6 %
		Y	2.03	66.91	14.93		150.0		
		Z	2.35	69.06	16.18		150.0		
10396-AAA	64-QAM Waveform, 100 kHz	X	3.63	73.67	20.23	3.01	150.0	± 0.7 %	± 9.6 %
		Y	2.94	69.39	18.20		150.0		
		Z	3.58	73.48	19.93		150.0		
10399-AAA	64-QAM Waveform, 40 MHz	X	3.66	68.13	16.41	0.00	150.0	± 2.3 %	± 9.6 %
		Y	3.40	66.69	15.46		150.0		
		Z	3.44	67.02	15.69		150.0		
10414-AAA	WLAN CCDF, 64-QAM, 40MHz	X	4.96	66.11	15.86	0.00	150.0	± 4.4 %	± 9.6 %
		Y	4.79	65.46	15.43		150.0		
		Z	4.77	65.41	15.36		150.0		

Note: For details on UID parameters see Appendix

The reported uncertainty of measurement is stated as the standard uncertainty of measurement multiplied by the coverage factor k=2, which for a normal distribution corresponds to a coverage probability of approximately 95%.

[A] The uncertainties of Norm X,Y,Z do not affect the E^2-field uncertainty inside TSL (see Pages 5 and 6).
[B] Numerical linearization parameter: uncertainty not required.
[E] Uncertainty is determined using the max. deviation from linear response applying rectangular distribution and is expressed for the square of the field value.

ONETECH Corp.: 43-14, Jinsaegol-gil, Chowol-eup, Gwangju-si, Gyeonggi-do, 12735, Korea (TEL: 82-31-799-9500, FAX: 82-31-799-9599)

EX3DV4– SN:3832 February 27, 2019

DASY/EASY - Parameters of Probe: EX3DV4 - SN:3832

Sensor Model Parameters

	C1 fF	C2 fF	α V^{-1}	T1 $ms.V^{-2}$	T2 $ms.V^{-1}$	T3 ms	T4 V^{-2}	T5 V^{-1}	T6
X	49.2	363.41	35.01	18.01	0.76	5.08	1.15	0.40	1.01
Y	44.4	340.08	37.15	13.78	0.85	5.08	0.00	0.61	1.01
Z	47.5	346.99	34.23	20.04	0.38	5.10	1.43	0.31	1.01

Other Probe Parameters

Sensor Arrangement	Triangular
Connector Angle (°)	55.8
Mechanical Surface Detection Mode	enabled
Optical Surface Detection Mode	disabled
Probe Overall Length	337 mm
Probe Body Diameter	10 mm
Tip Length	9 mm
Tip Diameter	2.5 mm
Probe Tip to Sensor X Calibration Point	1 mm
Probe Tip to Sensor Y Calibration Point	1 mm
Probe Tip to Sensor Z Calibration Point	1 mm
Recommended Measurement Distance from Surface	1.4 mm

Certificate No: EX3-3832_Feb19 Page 4 of 20

ONETECH Corp.: 43-14, Jinsaegol-gil, Chowol-eup, Gwangju-si, Gyeonggi-do, 12735, Korea (TEL: 82-31-799-9500, FAX: 82-31-799-9599)

DASY/EASY - Parameters of Probe: EX3DV4 - SN:3832

Calibration Parameter Determined in Head Tissue Simulating Media

f (MHz) [C]	Relative Permittivity [F]	Conductivity (S/m) [F]	ConvF X	ConvF Y	ConvF Z	Alpha [G]	Depth [G] (mm)	Unc (k=2)
150	52.3	0.76	11.50	11.50	11.50	0.00	1.00	± 13.3 %
300	45.3	0.87	10.87	10.87	10.87	0.07	1.30	± 13.3 %
450	43.5	0.87	10.21	10.21	10.21	0.15	1.30	± 13.3 %
750	41.9	0.89	9.97	9.97	9.97	0.52	0.80	± 12.0 %
835	41.5	0.90	9.19	9.19	9.19	0.54	0.85	± 12.0 %
900	41.5	0.97	9.05	9.05	9.05	0.40	0.95	± 12.0 %
1750	40.1	1.37	8.10	8.10	8.10	0.36	0.85	± 12.0 %
1950	40.0	1.40	7.78	7.78	7.78	0.30	0.85	± 12.0 %
2300	39.5	1.67	7.37	7.37	7.37	0.37	0.85	± 12.0 %
2450	39.2	1.80	7.11	7.11	7.11	0.34	0.88	± 12.0 %
2600	39.0	1.96	7.00	7.00	7.00	0.41	0.85	± 12.0 %
3500	37.9	2.91	6.80	6.80	6.80	0.23	1.20	± 13.1 %
3700	37.7	3.12	6.60	6.60	6.60	0.23	1.20	± 13.1 %
5200	36.0	4.66	5.18	5.18	5.18	0.40	1.80	± 13.1 %
5300	35.9	4.76	5.05	5.05	5.05	0.40	1.80	± 13.1 %
5500	35.6	4.96	4.71	4.71	4.71	0.40	1.80	± 13.1 %
5600	35.5	5.07	4.59	4.59	4.59	0.40	1.80	± 13.1 %
5800	35.3	5.27	4.67	4.67	4.67	0.40	1.80	± 13.1 %

[C] Frequency validity above 300 MHz of ± 100 MHz only applies for DASY v4.4 and higher (see Page 2), else it is restricted to ± 50 MHz. The uncertainty is the RSS of the ConvF uncertainty at calibration frequency and the uncertainty for the indicated frequency band. Frequency validity below 300 MHz is ± 10, 25, 40, 50 and 70 MHz for ConvF assessments at 30, 64, 128, 150 and 220 MHz respectively. Validity of ConvF assessed at 6 MHz is 4-9 MHz, and ConvF assessed at 13 MHz is 9-19 MHz. Above 5 GHz frequency validity can be extended to ± 110 MHz.
[F] At frequencies below 3 GHz, the validity of tissue parameters (ε and σ) can be relaxed to ± 10% if liquid compensation formula is applied to measured SAR values. At frequencies above 3 GHz, the validity of tissue parameters (ε and σ) is restricted to ± 5%. The uncertainty is the RSS of the ConvF uncertainty for indicated target tissue parameters.
[G] Alpha/Depth are determined during calibration. SPEAG warrants that the remaining deviation due to the boundary effect after compensation is always less than ± 1% for frequencies below 3 GHz and below ± 2% for frequencies between 3-6 GHz at any distance larger than half the probe tip diameter from the boundary.

DASY/EASY - Parameters of Probe: EX3DV4 - SN:3832

Calibration Parameter Determined in Body Tissue Simulating Media

f (MHz) [C]	Relative Permittivity [F]	Conductivity (S/m) [F]	ConvF X	ConvF Y	ConvF Z	Alpha [G]	Depth [G] (mm)	Unc (k=2)
150	61.9	0.80	11.05	11.05	11.05	0.00	1.00	± 13.3 %
300	58.2	0.92	10.61	10.61	10.61	0.04	1.30	± 13.3 %
450	56.7	0.94	10.46	10.46	10.46	0.09	1.30	± 13.3 %
750	55.5	0.96	9.36	9.36	9.36	0.54	0.80	± 12.0 %
835	55.2	0.97	9.13	9.13	9.13	0.48	0.81	± 12.0 %
900	55.0	1.05	8.93	8.93	8.93	0.44	0.88	± 12.0 %
1750	53.4	1.49	7.62	7.62	7.62	0.42	0.85	± 12.0 %
1950	53.3	1.52	7.57	7.57	7.57	0.32	0.99	± 12.0 %
2300	52.9	1.81	7.23	7.23	7.23	0.43	0.86	± 12.0 %
2450	52.7	1.95	7.19	7.19	7.19	0.42	0.89	± 12.0 %
2600	52.5	2.16	7.14	7.14	7.14	0.31	0.90	± 12.0 %
3500	51.3	3.31	6.56	6.56	6.56	0.25	1.25	± 13.1 %
3700	51.0	3.55	6.29	6.29	6.29	0.25	1.25	± 13.1 %
5200	49.0	5.30	4.69	4.69	4.69	0.50	1.90	± 13.1 %
5300	48.9	5.42	4.54	4.54	4.54	0.50	1.90	± 13.1 %
5500	48.6	5.65	4.14	4.14	4.14	0.50	1.90	± 13.1 %
5600	48.5	5.77	4.04	4.04	4.04	0.50	1.90	± 13.1 %
5800	48.2	6.00	4.12	4.12	4.12	0.50	1.90	± 13.1 %

[C] Frequency validity above 300 MHz of ± 100 MHz only applies for DASY v4.4 and higher (see Page 2), else it is restricted to ± 50 MHz. The uncertainty is the RSS of the ConvF uncertainty at calibration frequency and the uncertainty for the indicated frequency band. Frequency validity below 300 MHz is ± 10, 25, 40, 50 and 70 MHz for ConvF assessments at 30, 64, 128, 150 and 220 MHz respectively. Validity of ConvF assessed at 6 MHz is 4-9 MHz, and ConvF assessed at 13 MHz is 9-19 MHz. Above 5 GHz frequency validity can be extended to ± 110 MHz.
[F] At frequencies below 3 GHz, the validity of tissue parameters (ε and σ) can be relaxed to ± 10% if liquid compensation formula is applied to measured SAR values. At frequencies above 3 GHz, the validity of tissue parameters (ε and σ) is restricted to ± 5%. The uncertainty is the RSS of the ConvF uncertainty for indicated target tissue parameters.
[G] Alpha/Depth are determined during calibration. SPEAG warrants that the remaining deviation due to the boundary effect after compensation is always less than ± 1% for frequencies below 3 GHz and below ± 2% for frequencies between 3-6 GHz at any distance larger than half the probe tip diameter from the boundary.

EX3DV4– SN:3832 February 27, 2019

Frequency Response of E-Field
(TEM-Cell:ifi110 EXX, Waveguide: R22)

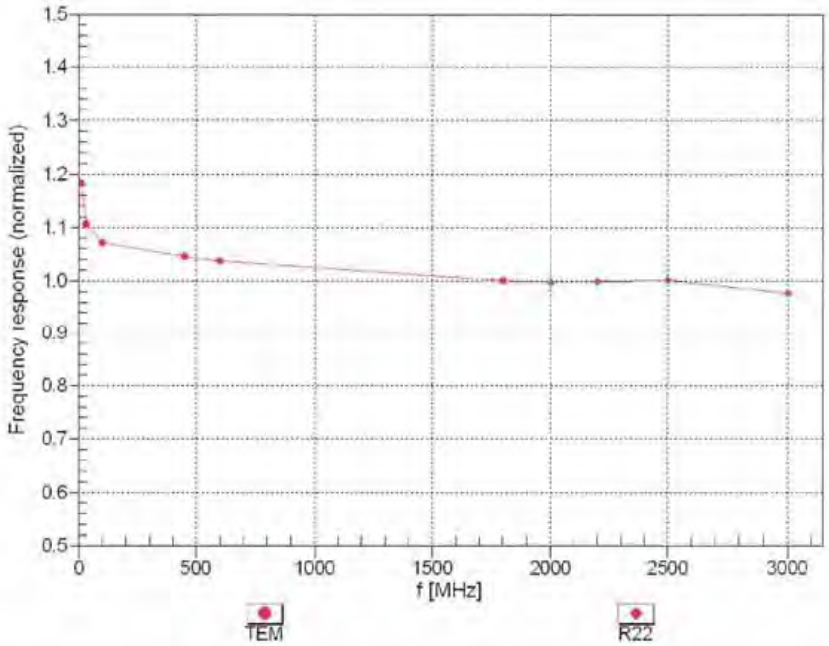

Uncertainty of Frequency Response of E-field: ± 6.3% (k=2)

Certificate No: EX3-3832_Feb19 Page 7 of 20

ONETECH Corp.: 43-14, Jinsaegol-gil, Chowol-eup, Gwangju-si, Gyeonggi-do, 12735, Korea (TEL: 82-31-799-9500, FAX: 82-31-799-9599)

EX3DV4– SN:3832 February 27, 2019

Receiving Pattern (ϕ), ϑ = 0°

f=600 MHz,TEM

f=1800 MHz,R22

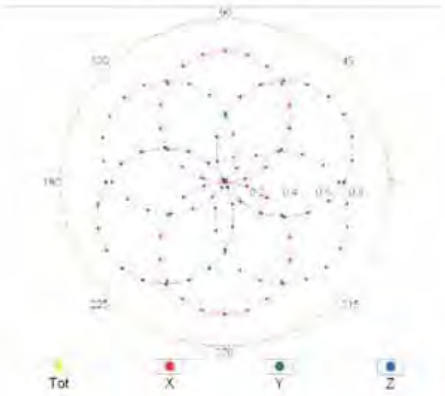

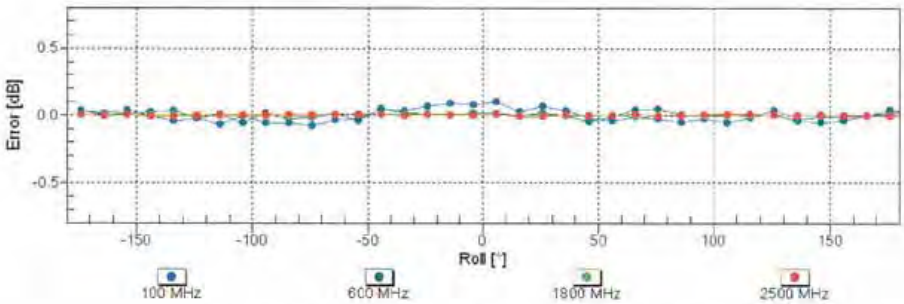

Uncertainty of Axial Isotropy Assessment: ± 0.5% (k=2)

Certificate No: EX3-3832_Feb19 Page 8 of 20

ONETECH Corp.: 43-14, Jinsaegol-gil, Chowol-eup, Gwangju-si, Gyeonggi-do, 12735, Korea (TEL: 82-31-799-9500, FAX: 82-31-799-9599)

EX3DV4– SN:3832 February 27, 2019

Dynamic Range f(SAR$_{head}$)
(TEM cell , f_{eval}= 1900 MHz)

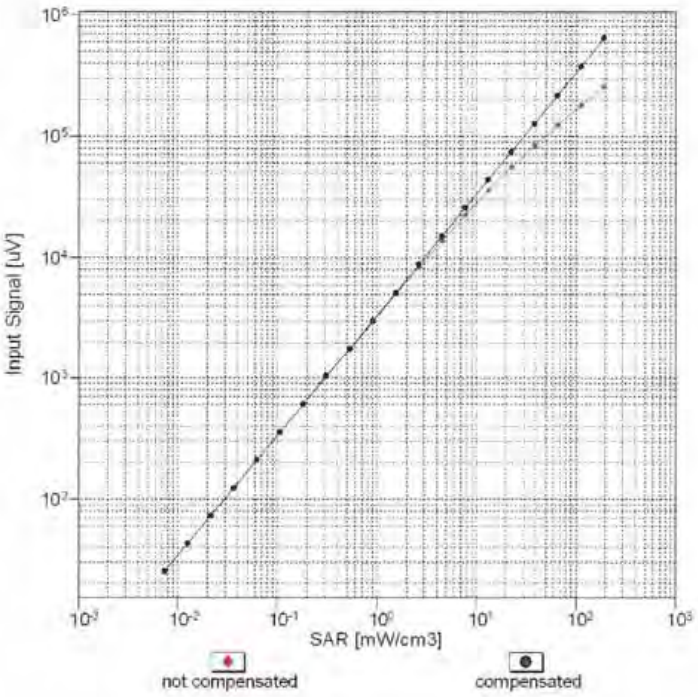

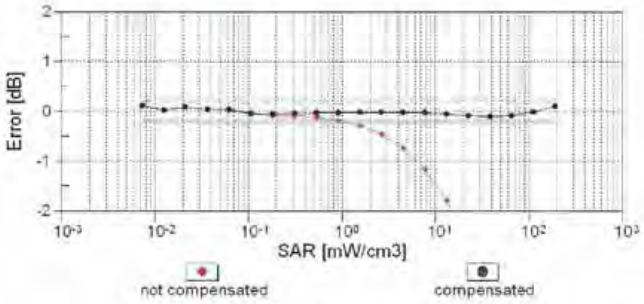

Uncertainty of Linearity Assessment: ± 0.6% (k=2)

Certificate No: EX3-3832_Feb19 Page 9 of 20

ONETECH Corp.: 43-14, Jinsaegol-gil, Chowol-eup, Gwangju-si, Gyeonggi-do, 12735, Korea (TEL: 82-31-799-9500, FAX: 82-31-799-9599)

EX3DV4– SN:3832 February 27, 2019

Conversion Factor Assessment

f = 900 MHz,WGLS R9 (H_convF)

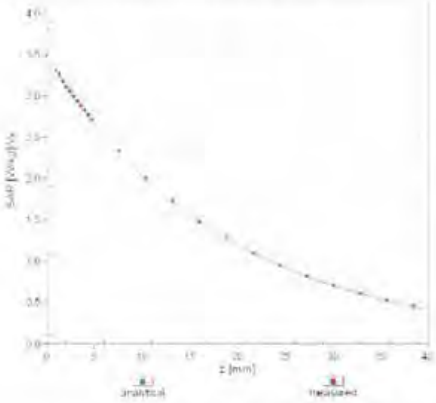

f = 1750 MHz,WGLS R22 (H_convF)

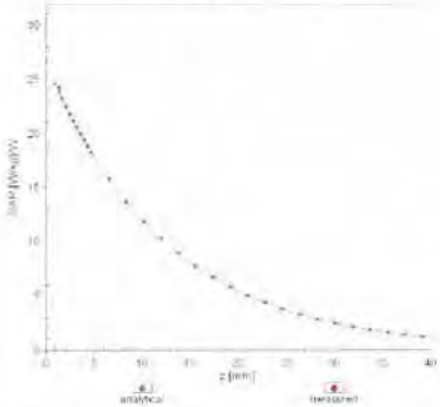

Deviation from Isotropy in Liquid

Error (ϕ, ϑ), f = 900 MHz

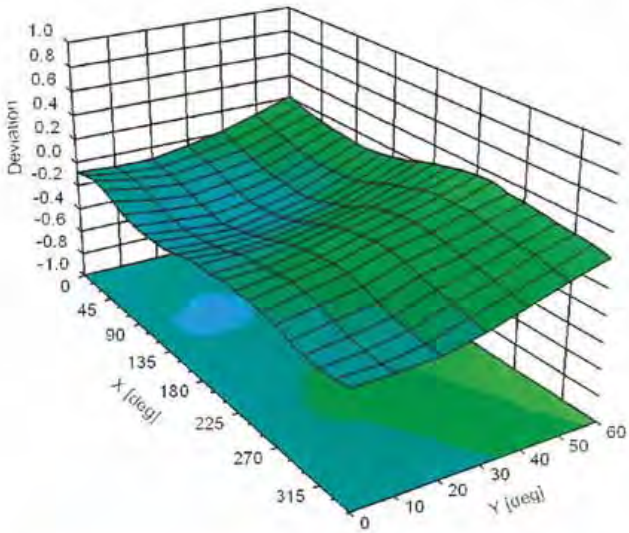

Uncertainty of Spherical Isotropy Assessment: ± 2.6% (k=2)

Certificate No: EX3-3832_Feb19 Page 10 of 20

ONETECH Corp.: 43-14, Jinsaegol-gil, Chowol-eup, Gwangju-si, Gyeonggi-do, 12735, Korea (TEL: 82-31-799-9500, FAX: 82-31-799-9599)

Appendix: Modulation Calibration Parameters

UID	Rev	Communication System Name	Group	PAR (dB)	Unc[E] (k=2)
0		CW	CW	0.00	± 4.7 %
10010	CAA	SAR Validation (Square, 100ms, 10ms)	Test	10.00	± 9.6 %
10011	CAB	UMTS-FDD (WCDMA)	WCDMA	2.91	± 9.6 %
10012	CAB	IEEE 802.11b WiFi 2.4 GHz (DSSS, 1 Mbps)	WLAN	1.87	± 9.6 %
10013	CAB	IEEE 802.11g WiFi 2.4 GHz (DSSS-OFDM, 6 Mbps)	WLAN	9.46	± 9.6 %
10021	DAC	GSM-FDD (TDMA, GMSK)	GSM	9.39	± 9.6 %
10023	DAC	GPRS-FDD (TDMA, GMSK, TN 0)	GSM	9.57	± 9.6 %
10024	DAC	GPRS-FDD (TDMA, GMSK, TN 0-1)	GSM	6.56	± 9.6 %
10025	DAC	EDGE-FDD (TDMA, 8PSK, TN 0)	GSM	12.62	± 9.6 %
10026	DAC	EDGE-FDD (TDMA, 8PSK, TN 0-1)	GSM	9.55	± 9.6 %
10027	DAC	GPRS-FDD (TDMA, GMSK, TN 0-1-2)	GSM	4.80	± 9.6 %
10028	DAC	GPRS-FDD (TDMA, GMSK, TN 0-1-2-3)	GSM	3.55	± 9.6 %
10029	DAC	EDGE-FDD (TDMA, 8PSK, TN 0-1-2)	GSM	7.78	± 9.6 %
10030	CAA	IEEE 802.15.1 Bluetooth (GFSK, DH1)	Bluetooth	5.30	± 9.6 %
10031	CAA	IEEE 802.15.1 Bluetooth (GFSK, DH3)	Bluetooth	1.87	± 9.6 %
10032	CAA	IEEE 802.15.1 Bluetooth (GFSK, DH5)	Bluetooth	1.16	± 9.6 %
10033	CAA	IEEE 802.15.1 Bluetooth (PI/4-DQPSK, DH1)	Bluetooth	7.74	± 9.6 %
10034	CAA	IEEE 802.15.1 Bluetooth (PI/4-DQPSK, DH3)	Bluetooth	4.53	± 9.6 %
10035	CAA	IEEE 802.15.1 Bluetooth (PI/4-DQPSK, DH5)	Bluetooth	3.83	± 9.6 %
10036	CAA	IEEE 802.15.1 Bluetooth (8-DPSK, DH1)	Bluetooth	8.01	± 9.6 %
10037	CAA	IEEE 802.15.1 Bluetooth (8-DPSK, DH3)	Bluetooth	4.77	± 9.6 %
10038	CAA	IEEE 802.15.1 Bluetooth (8-DPSK, DH5)	Bluetooth	4.10	± 9.6 %
10039	CAB	CDMA2000 (1xRTT, RC1)	CDMA2000	4.57	± 9.6 %
10042	CAB	IS-54 / IS-136 FDD (TDMA/FDM, PI/4-DQPSK, Halfrate)	AMPS	7.78	± 9.6 %
10044	CAA	IS-91/EIA/TIA-553 FDD (FDMA, FM)	AMPS	0.00	± 9.6 %
10048	CAA	DECT (TDD, TDMA/FDM, GFSK, Full Slot, 24)	DECT	13.80	± 9.6 %
10049	CAA	DECT (TDD, TDMA/FDM, GFSK, Double Slot, 12)	DECT	10.79	± 9.6 %
10056	CAA	UMTS-TDD (TD-SCDMA, 1.28 Mcps)	TD-SCDMA	11.01	± 9.6 %
10058	DAC	EDGE-FDD (TDMA, 8PSK, TN 0-1-2-3)	GSM	6.52	± 9.6 %
10059	CAB	IEEE 802.11b WiFi 2.4 GHz (DSSS, 2 Mbps)	WLAN	2.12	± 9.6 %
10060	CAB	IEEE 802.11b WiFi 2.4 GHz (DSSS, 5.5 Mbps)	WLAN	2.83	± 9.6 %
10061	CAB	IEEE 802.11b WiFi 2.4 GHz (DSSS, 11 Mbps)	WLAN	3.60	± 9.6 %
10062	CAC	IEEE 802.11a/h WiFi 5 GHz (OFDM, 6 Mbps)	WLAN	8.68	± 9.6 %
10063	CAC	IEEE 802.11a/h WiFi 5 GHz (OFDM, 9 Mbps)	WLAN	8.63	± 9.6 %
10064	CAC	IEEE 802.11a/h WiFi 5 GHz (OFDM, 12 Mbps)	WLAN	9.09	± 9.6 %
10065	CAC	IEEE 802.11a/h WiFi 5 GHz (OFDM, 18 Mbps)	WLAN	9.00	± 9.6 %
10066	CAC	IEEE 802.11a/h WiFi 5 GHz (OFDM, 24 Mbps)	WLAN	9.38	± 9.6 %
10067	CAC	IEEE 802.11a/h WiFi 5 GHz (OFDM, 36 Mbps)	WLAN	10.12	± 9.6 %
10068	CAC	IEEE 802.11a/h WiFi 5 GHz (OFDM, 48 Mbps)	WLAN	10.24	± 9.6 %
10069	CAC	IEEE 802.11a/h WiFi 5 GHz (OFDM, 54 Mbps)	WLAN	10.56	± 9.6 %
10071	CAB	IEEE 802.11g WiFi 2.4 GHz (DSSS/OFDM, 9 Mbps)	WLAN	9.83	± 9.6 %
10072	CAB	IEEE 802.11g WiFi 2.4 GHz (DSSS/OFDM, 12 Mbps)	WLAN	9.62	± 9.6 %
10073	CAB	IEEE 802.11g WiFi 2.4 GHz (DSSS/OFDM, 18 Mbps)	WLAN	9.94	± 9.6 %
10074	CAB	IEEE 802.11g WiFi 2.4 GHz (DSSS/OFDM, 24 Mbps)	WLAN	10.30	± 9.6 %
10075	CAB	IEEE 802.11g WiFi 2.4 GHz (DSSS/OFDM, 36 Mbps)	WLAN	10.77	± 9.6 %
10076	CAB	IEEE 802.11g WiFi 2.4 GHz (DSSS/OFDM, 48 Mbps)	WLAN	10.94	± 9.6 %
10077	CAB	IEEE 802.11g WiFi 2.4 GHz (DSSS/OFDM, 54 Mbps)	WLAN	11.00	± 9.6 %
10081	CAB	CDMA2000 (1xRTT, RC3)	CDMA2000	3.97	± 9.6 %
10082	CAB	IS-54 / IS-136 FDD (TDMA/FDM, PI/4-DQPSK, Fullrate)	AMPS	4.77	± 9.6 %
10090	DAC	GPRS-FDD (TDMA, GMSK, TN 0-4)	GSM	6.56	± 9.6 %
10097	CAB	UMTS-FDD (HSDPA)	WCDMA	3.98	± 9.6 %
10098	CAB	UMTS-FDD (HSUPA, Subtest 2)	WCDMA	3.98	± 9.6 %
10099	DAC	EDGE-FDD (TDMA, 8PSK, TN 0-4)	GSM	9.55	± 9.6 %
10100	CAE	LTE-FDD (SC-FDMA, 100% RB, 20 MHz, QPSK)	LTE-FDD	5.67	± 9.6 %
10101	CAE	LTE-FDD (SC-FDMA, 100% RB, 20 MHz, 16-QAM)	LTE-FDD	6.42	± 9.6 %
10102	CAE	LTE-FDD (SC-FDMA, 100% RB, 20 MHz, 64-QAM)	LTE-FDD	6.60	± 9.6 %
10103	CAG	LTE-TDD (SC-FDMA, 100% RB, 20 MHz, QPSK)	LTE-TDD	9.29	± 9.6 %
10104	CAG	LTE-TDD (SC-FDMA, 100% RB, 20 MHz, 16-QAM)	LTE-TDD	9.97	± 9.6 %
10105	CAG	LTE-TDD (SC-FDMA, 100% RB, 20 MHz, 64-QAM)	LTE-TDD	10.01	± 9.6 %
10108	CAG	LTE-FDD (SC-FDMA, 100% RB, 10 MHz, QPSK)	LTE-FDD	5.80	± 9.6 %

ONETECH Corp.: 43-14, Jinsaegol-gil, Chowol-eup, Gwangju-si, Gyeonggi-do, 12735, Korea (TEL: 82-31-799-9500, FAX: 82-31-799-9599)

EX3DV4– SN:3832 February 27, 2019

10109	CAG	LTE-FDD (SC-FDMA, 100% RB, 10 MHz, 16-QAM)	LTE-FDD	6.43	± 9.6 %
10110	CAG	LTE-FDD (SC-FDMA, 100% RB, 5 MHz, QPSK)	LTE-FDD	5.75	± 9.6 %
10111	CAG	LTE-FDD (SC-FDMA, 100% RB, 5 MHz, 16-QAM)	LTE-FDD	6.44	± 9.6 %
10112	CAG	LTE-FDD (SC-FDMA, 100% RB, 10 MHz, 64-QAM)	LTE-FDD	6.59	± 9.6 %
10113	CAG	LTE-FDD (SC-FDMA, 100% RB, 5 MHz, 64-QAM)	LTE-FDD	6.62	± 9.6 %
10114	CAC	IEEE 802.11n (HT Greenfield, 13.5 Mbps, BPSK)	WLAN	8.10	± 9.6 %
10115	CAC	IEEE 802.11n (HT Greenfield, 81 Mbps, 16-QAM)	WLAN	8.46	± 9.6 %
10116	CAC	IEEE 802.11n (HT Greenfield, 135 Mbps, 64-QAM)	WLAN	8.15	± 9.6 %
10117	CAC	IEEE 802.11n (HT Mixed, 13.5 Mbps, BPSK)	WLAN	8.07	± 9.6 %
10118	CAC	IEEE 802.11n (HT Mixed, 81 Mbps, 16-QAM)	WLAN	8.59	± 9.6 %
10119	CAC	IEEE 802.11n (HT Mixed, 135 Mbps, 64-QAM)	WLAN	8.13	± 9.6 %
10140	CAE	LTE-FDD (SC-FDMA, 100% RB, 15 MHz, 16-QAM)	LTE-FDD	6.49	± 9.6 %
10141	CAE	LTE-FDD (SC-FDMA, 100% RB, 15 MHz, 64-QAM)	LTE-FDD	6.53	± 9.6 %
10142	CAE	LTE-FDD (SC-FDMA, 100% RB, 3 MHz, QPSK)	LTE-FDD	5.73	± 9.6 %
10143	CAE	LTE-FDD (SC-FDMA, 100% RB, 3 MHz, 16-QAM)	LTE-FDD	6.35	± 9.6 %
10144	CAE	LTE-FDD (SC-FDMA, 100% RB, 3 MHz, 64-QAM)	LTE-FDD	6.65	± 9.6 %
10145	CAF	LTE-FDD (SC-FDMA, 100% RB, 1.4 MHz, QPSK)	LTE-FDD	5.76	± 9.6 %
10146	CAF	LTE-FDD (SC-FDMA, 100% RB, 1.4 MHz, 16-QAM)	LTE-FDD	6.41	± 9.6 %
10147	CAF	LTE-FDD (SC-FDMA, 100% RB, 1.4 MHz, 64-QAM)	LTE-FDD	6.72	± 9.6 %
10149	CAE	LTE-FDD (SC-FDMA, 50% RB, 20 MHz, 16-QAM)	LTE-FDD	6.42	± 9.6 %
10150	CAE	LTE-FDD (SC-FDMA, 50% RB, 20 MHz, 64-QAM)	LTE-FDD	6.60	± 9.6 %
10151	CAG	LTE-TDD (SC-FDMA, 50% RB, 20 MHz, QPSK)	LTE-TDD	9.28	± 9.6 %
10152	CAG	LTE-TDD (SC-FDMA, 50% RB, 20 MHz, 16-QAM)	LTE-TDD	9.92	± 9.6 %
10153	CAG	LTE-TDD (SC-FDMA, 50% RB, 20 MHz, 64-QAM)	LTE-TDD	10.05	± 9.6 %
10154	CAG	LTE-FDD (SC-FDMA, 50% RB, 10 MHz, QPSK)	LTE-FDD	5.75	± 9.6 %
10155	CAG	LTE-FDD (SC-FDMA, 50% RB, 10 MHz, 16-QAM)	LTE-FDD	6.43	± 9.6 %
10156	CAG	LTE-FDD (SC-FDMA, 50% RB, 5 MHz, QPSK)	LTE-FDD	5.79	± 9.6 %
10157	CAG	LTE-FDD (SC-FDMA, 50% RB, 5 MHz, 16-QAM)	LTE-FDD	6.49	± 9.6 %
10158	CAG	LTE-FDD (SC-FDMA, 50% RB, 10 MHz, 64-QAM)	LTE-FDD	6.62	± 9.6 %
10159	CAG	LTE-FDD (SC-FDMA, 50% RB, 5 MHz, 64-QAM)	LTE-FDD	6.56	± 9.6 %
10160	CAE	LTE-FDD (SC-FDMA, 50% RB, 15 MHz, QPSK)	LTE-FDD	5.82	± 9.6 %
10161	CAE	LTE-FDD (SC-FDMA, 50% RB, 15 MHz, 16-QAM)	LTE-FDD	6.43	± 9.6 %
10162	CAE	LTE-FDD (SC-FDMA, 50% RB, 15 MHz, 64-QAM)	LTE-FDD	6.58	± 9.6 %
10166	CAF	LTE-FDD (SC-FDMA, 50% RB, 1.4 MHz, QPSK)	LTE-FDD	5.46	± 9.6 %
10167	CAF	LTE-FDD (SC-FDMA, 50% RB, 1.4 MHz, 16-QAM)	LTE-FDD	6.21	± 9.6 %
10168	CAF	LTE-FDD (SC-FDMA, 50% RB, 1.4 MHz, 64-QAM)	LTE-FDD	6.79	± 9.6 %
10169	CAE	LTE-FDD (SC-FDMA, 1 RB, 20 MHz, QPSK)	LTE-FDD	5.73	± 9.6 %
10170	CAE	LTE-FDD (SC-FDMA, 1 RB, 20 MHz, 16-QAM)	LTE-FDD	6.52	± 9.6 %
10171	AAE	LTE-FDD (SC-FDMA, 1 RB, 20 MHz, 64-QAM)	LTE-FDD	6.49	± 9.6 %
10172	CAG	LTE-TDD (SC-FDMA, 1 RB, 20 MHz, QPSK)	LTE-TDD	9.21	± 9.6 %
10173	CAG	LTE-TDD (SC-FDMA, 1 RB, 20 MHz, 16-QAM)	LTE-TDD	9.48	± 9.6 %
10174	CAG	LTE-TDD (SC-FDMA, 1 RB, 20 MHz, 64-QAM)	LTE-TDD	10.25	± 9.6 %
10175	CAG	LTE-FDD (SC-FDMA, 1 RB, 10 MHz, QPSK)	LTE-FDD	5.72	± 9.6 %
10176	CAG	LTE-FDD (SC-FDMA, 1 RB, 10 MHz, 16-QAM)	LTE-FDD	6.52	± 9.6 %
10177	CAI	LTE-FDD (SC-FDMA, 1 RB, 5 MHz, QPSK)	LTE-FDD	5.73	± 9.6 %
10178	CAG	LTE-FDD (SC-FDMA, 1 RB, 5 MHz, 16-QAM)	LTE-FDD	6.52	± 9.6 %
10179	CAG	LTE-FDD (SC-FDMA, 1 RB, 10 MHz, 64-QAM)	LTE-FDD	6.50	± 9.6 %
10180	CAG	LTE-FDD (SC-FDMA, 1 RB, 5 MHz, 64-QAM)	LTE-FDD	6.50	± 9.6 %
10181	CAE	LTE-FDD (SC-FDMA, 1 RB, 15 MHz, QPSK)	LTE-FDD	5.72	± 9.6 %
10182	CAE	LTE-FDD (SC-FDMA, 1 RB, 15 MHz, 16-QAM)	LTE-FDD	6.52	± 9.6 %
10183	AAD	LTE-FDD (SC-FDMA, 1 RB, 15 MHz, 64-QAM)	LTE-FDD	6.50	± 9.6 %
10184	CAE	LTE-FDD (SC-FDMA, 1 RB, 3 MHz, QPSK)	LTE-FDD	5.73	± 9.6 %
10185	CAE	LTE-FDD (SC-FDMA, 1 RB, 3 MHz, 16-QAM)	LTE-FDD	6.51	± 9.6 %
10186	AAE	LTE-FDD (SC-FDMA, 1 RB, 3 MHz, 64-QAM)	LTE-FDD	6.50	± 9.6 %
10187	CAF	LTE-FDD (SC-FDMA, 1 RB, 1.4 MHz, QPSK)	LTE-FDD	5.73	± 9.6 %
10188	CAF	LTE-FDD (SC-FDMA, 1 RB, 1.4 MHz, 16-QAM)	LTE-FDD	6.52	± 9.6 %
10189	AAF	LTE-FDD (SC-FDMA, 1 RB, 1.4 MHz, 64-QAM)	LTE-FDD	6.50	± 9.6 %
10193	CAC	IEEE 802.11n (HT Greenfield, 6.5 Mbps, BPSK)	WLAN	8.09	± 9.6 %
10194	CAC	IEEE 802.11n (HT Greenfield, 39 Mbps, 16-QAM)	WLAN	8.12	± 9.6 %
10195	CAC	IEEE 802.11n (HT Greenfield, 65 Mbps, 64-QAM)	WLAN	8.21	± 9.6 %
10196	CAC	IEEE 802.11n (HT Mixed, 6.5 Mbps, BPSK)	WLAN	8.10	± 9.6 %
10197	CAC	IEEE 802.11n (HT Mixed, 39 Mbps, 16-QAM)	WLAN	8.13	± 9.6 %
10198	CAC	IEEE 802.11n (HT Mixed, 65 Mbps, 64-QAM)	WLAN	8.27	± 9.6 %
10219	CAC	IEEE 802.11n (HT Mixed, 7.2 Mbps, BPSK)	WLAN	8.03	± 9.6 %

Certificate No: EX3-3832_Feb19 Page 12 of 20

EX3DV4– SN:3832 February 27, 2019

10220	CAC	IEEE 802.11n (HT Mixed, 43.3 Mbps, 16-QAM)	WLAN	8.13	± 9.6 %
10221	CAC	IEEE 802.11n (HT Mixed, 72.2 Mbps, 64-QAM)	WLAN	8.27	± 9.6 %
10222	CAC	IEEE 802.11n (HT Mixed, 15 Mbps, BPSK)	WLAN	8.06	± 9.6 %
10223	CAC	IEEE 802.11n (HT Mixed, 90 Mbps, 16-QAM)	WLAN	8.48	± 9.6 %
10224	CAC	IEEE 802.11n (HT Mixed, 150 Mbps, 64-QAM)	WLAN	8.08	± 9.6 %
10225	CAB	UMTS-FDD (HSPA+)	WCDMA	5.97	± 9.6 %
10226	CAA	LTE-TDD (SC-FDMA, 1 RB, 1.4 MHz, 16-QAM)	LTE-TDD	9.49	± 9.6 %
10227	CAA	LTE-TDD (SC-FDMA, 1 RB, 1.4 MHz, 64-QAM)	LTE-TDD	10.26	± 9.6 %
10228	CAA	LTE-TDD (SC-FDMA, 1 RB, 1.4 MHz, QPSK)	LTE-TDD	9.22	± 9.6 %
10229	CAC	LTE-TDD (SC-FDMA, 1 RB, 3 MHz, 16-QAM)	LTE-TDD	9.48	± 9.6 %
10230	CAC	LTE-TDD (SC-FDMA, 1 RB, 3 MHz, 64-QAM)	LTE-TDD	10.25	± 9.6 %
10231	CAC	LTE-TDD (SC-FDMA, 1 RB, 3 MHz, QPSK)	LTE-TDD	9.19	± 9.6 %
10232	CAF	LTE-TDD (SC-FDMA, 1 RB, 5 MHz, 16-QAM)	LTE-TDD	9.48	± 9.6 %
10233	CAF	LTE-TDD (SC-FDMA, 1 RB, 5 MHz, 64-QAM)	LTE-TDD	10.25	± 9.6 %
10234	CAF	LTE-TDD (SC-FDMA, 1 RB, 5 MHz, QPSK)	LTE-TDD	9.21	± 9.6 %
10235	CAF	LTE-TDD (SC-FDMA, 1 RB, 10 MHz, 16-QAM)	LTE-TDD	9.48	± 9.6 %
10236	CAF	LTE-TDD (SC-FDMA, 1 RB, 10 MHz, 64-QAM)	LTE-TDD	10.25	± 9.6 %
10237	CAF	LTE-TDD (SC-FDMA, 1 RB, 10 MHz, QPSK)	LTE-TDD	9.21	± 9.6 %
10238	CAF	LTE-TDD (SC-FDMA, 1 RB, 15 MHz, 16-QAM)	LTE-TDD	9.48	± 9.6 %
10239	CAF	LTE-TDD (SC-FDMA, 1 RB, 15 MHz, 64-QAM)	LTE-TDD	10.25	± 9.6 %
10240	CAF	LTE-TDD (SC-FDMA, 1 RB, 15 MHz, QPSK)	LTE-TDD	9.21	± 9.6 %
10241	CAA	LTE-TDD (SC-FDMA, 50% RB, 1.4 MHz, 16-QAM)	LTE-TDD	9.82	± 9.6 %
10242	CAA	LTE-TDD (SC-FDMA, 50% RB, 1.4 MHz, 64-QAM)	LTE-TDD	9.86	± 9.6 %
10243	CAA	LTE-TDD (SC-FDMA, 50% RB, 1.4 MHz, QPSK)	LTE-TDD	9.46	± 9.6 %
10244	CAC	LTE-TDD (SC-FDMA, 50% RB, 3 MHz, 16-QAM)	LTE-TDD	10.06	± 9.6 %
10245	CAC	LTE-TDD (SC-FDMA, 50% RB, 3 MHz, 64-QAM)	LTE-TDD	10.06	± 9.6 %
10246	CAC	LTE-TDD (SC-FDMA, 50% RB, 3 MHz, QPSK)	LTE-TDD	9.30	± 9.6 %
10247	CAF	LTE-TDD (SC-FDMA, 50% RB, 5 MHz, 16-QAM)	LTE-TDD	9.91	± 9.6 %
10248	CAF	LTE-TDD (SC-FDMA, 50% RB, 5 MHz, 64-QAM)	LTE-TDD	10.09	± 9.6 %
10249	CAF	LTE-TDD (SC-FDMA, 50% RB, 5 MHz, QPSK)	LTE-TDD	9.29	± 9.6 %
10250	CAF	LTE-TDD (SC-FDMA, 50% RB, 10 MHz, 16-QAM)	LTE-TDD	9.81	± 9.6 %
10251	CAF	LTE-TDD (SC-FDMA, 50% RB, 10 MHz, 64-QAM)	LTE-TDD	10.17	± 9.6 %
10252	CAF	LTE-TDD (SC-FDMA, 50% RB, 10 MHz, QPSK)	LTE-TDD	9.24	± 9.6 %
10253	CAF	LTE-TDD (SC-FDMA, 50% RB, 15 MHz, 16-QAM)	LTE-TDD	9.90	± 9.6 %
10254	CAF	LTE-TDD (SC-FDMA, 50% RB, 15 MHz, 64-QAM)	LTE-TDD	10.14	± 9.6 %
10255	CAF	LTE-TDD (SC-FDMA, 50% RB, 15 MHz, QPSK)	LTE-TDD	9.20	± 9.6 %
10256	CAA	LTE-TDD (SC-FDMA, 100% RB, 1.4 MHz, 16-QAM)	LTE-TDD	9.96	± 9.6 %
10257	CAA	LTE-TDD (SC-FDMA, 100% RB, 1.4 MHz, 64-QAM)	LTE-TDD	10.08	± 9.6 %
10258	CAA	LTE-TDD (SC-FDMA, 100% RB, 1.4 MHz, QPSK)	LTE-TDD	9.34	± 9.6 %
10259	CAC	LTE-TDD (SC-FDMA, 100% RB, 3 MHz, 16-QAM)	LTE-TDD	9.98	± 9.6 %
10260	CAC	LTE-TDD (SC-FDMA, 100% RB, 3 MHz, 64-QAM)	LTE-TDD	9.97	± 9.6 %
10261	CAC	LTE-TDD (SC-FDMA, 100% RB, 3 MHz, QPSK)	LTE-TDD	9.24	± 9.6 %
10262	CAF	LTE-TDD (SC-FDMA, 100% RB, 5 MHz, 16-QAM)	LTE-TDD	9.83	± 9.6 %
10263	CAF	LTE-TDD (SC-FDMA, 100% RB, 5 MHz, 64-QAM)	LTE-TDD	10.16	± 9.6 %
10264	CAF	LTE-TDD (SC-FDMA, 100% RB, 5 MHz, QPSK)	LTE-TDD	9.23	± 9.6 %
10265	CAF	LTE-TDD (SC-FDMA, 100% RB, 10 MHz, 16-QAM)	LTE-TDD	9.92	± 9.6 %
10266	CAF	LTE-TDD (SC-FDMA, 100% RB, 10 MHz, 64-QAM)	LTE-TDD	10.07	± 9.6 %
10267	CAF	LTE-TDD (SC-FDMA, 100% RB, 10 MHz, QPSK)	LTE-TDD	9.30	± 9.6 %
10268	CAF	LTE-TDD (SC-FDMA, 100% RB, 15 MHz, 16-QAM)	LTE-TDD	10.06	± 9.6 %
10269	CAF	LTE-TDD (SC-FDMA, 100% RB, 15 MHz, 64-QAM)	LTE-TDD	10.13	± 9.6 %
10270	CAF	LTE-TDD (SC-FDMA, 100% RB, 15 MHz, QPSK)	LTE-TDD	9.58	± 9.6 %
10274	CAB	UMTS-FDD (HSUPA, Subtest 5, 3GPP Rel8.10)	WCDMA	4.87	± 9.6 %
10275	CAB	UMTS-FDD (HSUPA, Subtest 5, 3GPP Rel8.4)	WCDMA	3.96	± 9.6 %
10277	CAA	PHS (QPSK)	PHS	11.81	± 9.6 %
10278	CAA	PHS (QPSK, BW 884MHz, Rolloff 0.5)	PHS	11.81	± 9.6 %
10279	CAA	PHS (QPSK, BW 884MHz, Rolloff 0.38)	PHS	12.18	± 9.6 %
10290	AAB	CDMA2000, RC1, SO55, Full Rate	CDMA2000	3.91	± 9.6 %
10291	AAB	CDMA2000, RC3, SO55, Full Rate	CDMA2000	3.46	± 9.6 %
10292	AAB	CDMA2000, RC3, SO32, Full Rate	CDMA2000	3.39	± 9.6 %
10293	AAB	CDMA2000, RC3, SO3, Full Rate	CDMA2000	3.50	± 9.6 %
10295	AAB	CDMA2000, RC1, SO3, 1/8th Rate 25 fr.	CDMA2000	12.49	± 9.6 %
10297	AAD	LTE-FDD (SC-FDMA, 50% RB, 20 MHz, QPSK)	LTE-FDD	5.81	± 9.6 %
10298	AAD	LTE-FDD (SC-FDMA, 50% RB, 3 MHz, QPSK)	LTE-FDD	5.72	± 9.6 %
10299	AAD	LTE-FDD (SC-FDMA, 50% RB, 3 MHz, 16-QAM)	LTE-FDD	6.39	± 9.6 %

ONETECH Corp.: 43-14, Jinsaegol-gil, Chowol-eup, Gwangju-si, Gyeonggi-do, 12735, Korea (TEL: 82-31-799-9500, FAX: 82-31-799-9599)

10300	AAD	LTE-FDD (SC-FDMA, 50% RB, 3 MHz, 64-QAM)	LTE-FDD	6.60	± 9.6 %
10301	AAA	IEEE 802.16e WiMAX (29:18, 5ms, 10MHz, QPSK, PUSC)	WiMAX	12.03	± 9.6 %
10302	AAA	IEEE 802.16e WiMAX (29:18, 5ms, 10MHz, QPSK, PUSC, 3 CTRL symbols)	WiMAX	12.57	± 9.6 %
10303	AAA	IEEE 802.16e WiMAX (31:15, 5ms, 10MHz, 64QAM, PUSC)	WiMAX	12.52	± 9.6 %
10304	AAA	IEEE 802.16e WiMAX (29:18, 5ms, 10MHz, 64QAM, PUSC)	WiMAX	11.86	± 9.6 %
10305	AAA	IEEE 802.16e WiMAX (31:15, 10ms, 10MHz, 64QAM, PUSC, 15 symbols)	WiMAX	15.24	± 9.6 %
10306	AAA	IEEE 802.16e WiMAX (29:18, 10ms, 10MHz, 64QAM, PUSC, 18 symbols)	WiMAX	14.67	± 9.6 %
10307	AAA	IEEE 802.16e WiMAX (29:18, 10ms, 10MHz, QPSK, PUSC, 18 symbols)	WiMAX	14.49	± 9.6 %
10308	AAA	IEEE 802.16e WiMAX (29:18, 10ms, 10MHz, 16QAM, PUSC)	WiMAX	14.46	± 9.6 %
10309	AAA	IEEE 802.16e WiMAX (29:18, 10ms, 10MHz, 16QAM, AMC 2x3, 18 symbols)	WiMAX	14.58	± 9.6 %
10310	AAA	IEEE 802.16e WiMAX (29:18, 10ms, 10MHz, QPSK, AMC 2x3, 18 symbols)	WiMAX	14.57	± 9.6 %
10311	AAD	LTE-FDD (SC-FDMA, 100% RB, 15 MHz, QPSK)	LTE-FDD	6.06	± 9.6 %
10313	AAA	iDEN 1:3	iDEN	10.51	± 9.6 %
10314	AAA	iDEN 1:6	iDEN	13.48	± 9.6 %
10315	AAB	IEEE 802.11b WiFi 2.4 GHz (DSSS, 1 Mbps, 96pc duty cycle)	WLAN	1.71	± 9.6 %
10316	AAB	IEEE 802.11g WiFi 2.4 GHz (ERP-OFDM, 6 Mbps, 96pc duty cycle)	WLAN	8.36	± 9.6 %
10317	AAC	IEEE 802.11a WiFi 5 GHz (OFDM, 6 Mbps, 96pc duty cycle)	WLAN	8.36	± 9.6 %
10352	AAA	Pulse Waveform (200Hz, 10%)	Generic	10.00	± 9.6 %
10353	AAA	Pulse Waveform (200Hz, 20%)	Generic	6.99	± 9.6 %
10354	AAA	Pulse Waveform (200Hz, 40%)	Generic	3.98	± 9.6 %
10355	AAA	Pulse Waveform (200Hz, 60%)	Generic	2.22	± 9.6 %
10356	AAA	Pulse Waveform (200Hz, 80%)	Generic	0.97	± 9.6 %
10387	AAA	QPSK Waveform, 1 MHz	Generic	5.10	± 9.6 %
10388	AAA	QPSK Waveform, 10 MHz	Generic	5.22	± 9.6 %
10396	AAA	64-QAM Waveform, 100 kHz	Generic	6.27	± 9.6 %
10399	AAA	64-QAM Waveform, 40 MHz	Generic	6.27	± 9.6 %
10400	AAD	IEEE 802.11ac WiFi (20MHz, 64-QAM, 99pc duty cycle)	WLAN	8.37	± 9.6 %
10401	AAD	IEEE 802.11ac WiFi (40MHz, 64-QAM, 99pc duty cycle)	WLAN	8.60	± 9.6 %
10402	AAD	IEEE 802.11ac WiFi (80MHz, 64-QAM, 99pc duty cycle)	WLAN	8.53	± 9.6 %
10403	AAB	CDMA2000 (1xEV-DO, Rev. 0)	CDMA2000	3.76	± 9.6 %
10404	AAB	CDMA2000 (1xEV-DO, Rev. A)	CDMA2000	3.77	± 9.6 %
10406	AAB	CDMA2000, RC3, SO32, SCH0, Full Rate	CDMA2000	5.22	± 9.6 %
10410	AAF	LTE-TDD (SC-FDMA, 1 RB, 10 MHz, QPSK, UL Subframe=2,3,4,7,8,9, Subframe Conf=4)	LTE-TDD	7.82	± 9.6 %
10414	AAA	WLAN CCDF, 64-QAM, 40MHz	Generic	8.54	± 9.6 %
10415	AAA	IEEE 802.11b WiFi 2.4 GHz (DSSS, 1 Mbps, 99pc duty cycle)	WLAN	1.54	± 9.6 %
10416	AAA	IEEE 802.11g WiFi 2.4 GHz (ERP-OFDM, 6 Mbps, 99pc duty cycle)	WLAN	8.23	± 9.6 %
10417	AAB	IEEE 802.11a/h WiFi 5 GHz (OFDM, 6 Mbps, 99pc duty cycle)	WLAN	8.23	± 9.6 %
10418	AAA	IEEE 802.11g WiFi 2.4 GHz (DSSS-OFDM, 6 Mbps, 99pc duty cycle, Long preambule)	WLAN	8.14	± 9.6 %
10419	AAA	IEEE 802.11g WiFi 2.4 GHz (DSSS-OFDM, 6 Mbps, 99pc duty cycle, Short preambule)	WLAN	8.19	± 9.6 %
10422	AAB	IEEE 802.11n (HT Greenfield, 7.2 Mbps, BPSK)	WLAN	8.32	± 9.6 %
10423	AAB	IEEE 802.11n (HT Greenfield, 43.3 Mbps, 16-QAM)	WLAN	8.47	± 9.6 %
10424	AAB	IEEE 802.11n (HT Greenfield, 72.2 Mbps, 64-QAM)	WLAN	8.40	± 9.6 %
10425	AAB	IEEE 802.11n (HT Greenfield, 15 Mbps, BPSK)	WLAN	8.41	± 9.6 %
10426	AAB	IEEE 802.11n (HT Greenfield, 90 Mbps, 16-QAM)	WLAN	8.45	± 9.6 %
10427	AAB	IEEE 802.11n (HT Greenfield, 150 Mbps, 64-QAM)	WLAN	8.41	± 9.6 %
10430	AAD	LTE-FDD (OFDMA, 5 MHz, E-TM 3.1)	LTE-FDD	8.28	± 9.6 %
10431	AAD	LTE-FDD (OFDMA, 10 MHz, E-TM 3.1)	LTE-FDD	8.38	± 9.6 %
10432	AAC	LTE-FDD (OFDMA, 15 MHz, E-TM 3.1)	LTE-FDD	8.34	± 9.6 %
10433	AAC	LTE-FDD (OFDMA, 20 MHz, E-TM 3.1)	LTE-FDD	8.34	± 9.6 %
10434	AAA	W-CDMA (BS Test Model 1, 64 DPCH)	WCDMA	8.60	± 9.6 %
10435	AAF	LTE-TDD (SC-FDMA, 1 RB, 20 MHz, QPSK, UL Subframe=2,3,4,7,8,9)	LTE-TDD	7.82	± 9.6 %
10447	AAD	LTE-FDD (OFDMA, 5 MHz, E-TM 3.1, Clipping 44%)	LTE-FDD	7.56	± 9.6 %
10448	AAD	LTE-FDD (OFDMA, 10 MHz, E-TM 3.1, Clippin 44%)	LTE-FDD	7.53	± 9.6 %
10449	AAC	LTE-FDD (OFDMA, 15 MHz, E-TM 3.1, Cliping 44%)	LTE-FDD	7.51	± 9.6 %
10450	AAC	LTE-FDD (OFDMA, 20 MHz, E-TM 3.1, Clipping 44%)	LTE-FDD	7.48	± 9.6 %

ONETECH Corp.: 43-14, Jinsaegol-gil, Chowol-eup, Gwangju-si, Gyeonggi-do, 12735, Korea (TEL: 82-31-799-9500, FAX: 82-31-799-9599)

EX3DV4– SN:3832 February 27, 2019

10451	AAA	W-CDMA (BS Test Model 1, 64 DPCH, Clipping 44%)	WCDMA	7.59	± 9.6 %
10456	AAB	IEEE 802.11ac WiFi (160MHz, 64-QAM, 99pc duty cycle)	WLAN	8.63	± 9.6 %
10457	AAA	UMTS-FDD (DC-HSDPA)	WCDMA	6.62	± 9.6 %
10458	AAA	CDMA2000 (1xEV-DO, Rev. B, 2 carriers)	CDMA2000	6.55	± 9.6 %
10459	AAA	CDMA2000 (1xEV-DO, Rev. B, 3 carriers)	CDMA2000	8.25	± 9.6 %
10460	AAA	UMTS-FDD (WCDMA, AMR)	WCDMA	2.39	± 9.6 %
10461	AAA	LTE-TDD (SC-FDMA, 1 RB, 1.4 MHz, QPSK, UL Subframe=2,3,4,7,8,9)	LTE-TDD	7.82	± 9.6 %
10462	AAA	LTE-TDD (SC-FDMA, 1 RB, 1.4 MHz, 16-QAM, UL Subframe=2,3,4,7,8,9)	LTE-TDD	8.30	± 9.6 %
10463	AAA	LTE-TDD (SC-FDMA, 1 RB, 1.4 MHz, 64-QAM, UL Subframe=2,3,4,7,8,9)	LTE-TDD	8.56	± 9.6 %
10464	AAB	LTE-TDD (SC-FDMA, 1 RB, 3 MHz, QPSK, UL Subframe=2,3,4,7,8,9)	LTE-TDD	7.82	± 9.6 %
10465	AAB	LTE-TDD (SC-FDMA, 1 RB, 3 MHz, 16-QAM, UL Subframe=2,3,4,7,8,9)	LTE-TDD	8.32	± 9.6 %
10466	AAB	LTE-TDD (SC-FDMA, 1 RB, 3 MHz, 64-QAM, UL Subframe=2,3,4,7,8,9)	LTE-TDD	8.57	± 9.6 %
10467	AAE	LTE-TDD (SC-FDMA, 1 RB, 5 MHz, QPSK, UL Subframe=2,3,4,7,8,9)	LTE-TDD	7.82	± 9.6 %
10468	AAE	LTE-TDD (SC-FDMA, 1 RB, 5 MHz, 16-QAM, UL Subframe=2,3,4,7,8,9)	LTE-TDD	8.32	± 9.6 %
10469	AAE	LTE-TDD (SC-FDMA, 1 RB, 5 MHz, 64-QAM, UL Subframe=2,3,4,7,8,9)	LTE-TDD	8.56	± 9.6 %
10470	AAE	LTE-TDD (SC-FDMA, 1 RB, 10 MHz, QPSK, UL Subframe=2,3,4,7,8,9)	LTE-TDD	7.82	± 9.6 %
10471	AAE	LTE-TDD (SC-FDMA, 1 RB, 10 MHz, 16-QAM, UL Subframe=2,3,4,7,8,9)	LTE-TDD	8.32	± 9.6 %
10472	AAE	LTE-TDD (SC-FDMA, 1 RB, 10 MHz, 64-QAM, UL Subframe=2,3,4,7,8,9)	LTE-TDD	8.57	± 9.6 %
10473	AAE	LTE-TDD (SC-FDMA, 1 RB, 15 MHz, QPSK, UL Subframe=2,3,4,7,8,9)	LTE-TDD	7.82	± 9.6 %
10474	AAE	LTE-TDD (SC-FDMA, 1 RB, 15 MHz, 16-QAM, UL Subframe=2,3,4,7,8,9)	LTE-TDD	8.32	± 9.6 %
10475	AAE	LTE-TDD (SC-FDMA, 1 RB, 15 MHz, 64-QAM, UL Subframe=2,3,4,7,8,9)	LTE-TDD	8.57	± 9.6 %
10477	AAF	LTE-TDD (SC-FDMA, 1 RB, 20 MHz, 16-QAM, UL Subframe=2,3,4,7,8,9)	LTE-TDD	8.32	± 9.6 %
10478	AAF	LTE-TDD (SC-FDMA, 1 RB, 20 MHz, 64-QAM, UL Subframe=2,3,4,7,8,9)	LTE-TDD	8.57	± 9.6 %
10479	AAA	LTE-TDD (SC-FDMA, 50% RB, 1.4 MHz, QPSK, UL Subframe=2,3,4,7,8,9)	LTE-TDD	7.74	± 9.6 %
10480	AAA	LTE-TDD (SC-FDMA, 50% RB, 1.4 MHz, 16-QAM, UL Subframe=2,3,4,7,8,9)	LTE-TDD	8.18	± 9.6 %
10481	AAA	LTE-TDD (SC-FDMA, 50% RB, 1.4 MHz, 64-QAM, UL Subframe=2,3,4,7,8,9)	LTE-TDD	8.45	± 9.6 %
10482	AAB	LTE-TDD (SC-FDMA, 50% RB, 3 MHz, QPSK, UL Subframe=2,3,4,7,8,9)	LTE-TDD	7.71	± 9.6 %
10483	AAB	LTE-TDD (SC-FDMA, 50% RB, 3 MHz, 16-QAM, UL Subframe=2,3,4,7,8,9)	LTE-TDD	8.39	± 9.6 %
10484	AAB	LTE-TDD (SC-FDMA, 50% RB, 3 MHz, 64-QAM, UL Subframe=2,3,4,7,8,9)	LTE-TDD	8.47	± 9.6 %
10485	AAE	LTE-TDD (SC-FDMA, 50% RB, 5 MHz, QPSK, UL Subframe=2,3,4,7,8,9)	LTE-TDD	7.59	± 9.6 %
10486	AAF	LTE-TDD (SC-FDMA, 50% RB, 5 MHz, 16-QAM, UL Subframe=2,3,4,7,8,9)	LTE-TDD	8.38	± 9.6 %
10487	AAE	LTE-TDD (SC-FDMA, 50% RB, 5 MHz, 64-QAM, UL Subframe=2,3,4,7,8,9)	LTE-TDD	8.60	± 9.6 %
10488	AAE	LTE-TDD (SC-FDMA, 50% RB, 10 MHz, QPSK, UL Subframe=2,3,4,7,8,9)	LTE-TDD	7.70	± 9.6 %
10489	AAE	LTE-TDD (SC-FDMA, 50% RB, 10 MHz, 16-QAM, UL Subframe=2,3,4,7,8,9)	LTE-TDD	8.31	± 9.6 %
10490	AAE	LTE-TDD (SC-FDMA, 50% RB, 10 MHz, 64-QAM, UL Subframe=2,3,4,7,8,9)	LTE-TDD	8.54	± 9.6 %
10491	AAE	LTE-TDD (SC-FDMA, 50% RB, 15 MHz, QPSK, UL Subframe=2,3,4,7,8,9)	LTE-TDD	7.74	± 9.6 %

Certificate No: EX3-3832_Feb19 Page 15 of 20

10492	AAE	LTE-TDD (SC-FDMA, 50% RB, 15 MHz, 16-QAM, UL Subframe=2,3,4,7,8,9)	LTE-TDD	8.41	± 9.6 %
10493	AAE	LTE-TDD (SC-FDMA, 50% RB, 15 MHz, 64-QAM, UL Subframe=2,3,4,7,8,9)	LTE-TDD	8.55	± 9.6 %
10494	AAF	LTE-TDD (SC-FDMA, 50% RB, 20 MHz, QPSK, UL Subframe=2,3,4,7,8,9)	LTE-TDD	7.74	± 9.6 %
10495	AAF	LTE-TDD (SC-FDMA, 50% RB, 20 MHz, 16-QAM, UL Subframe=2,3,4,7,8,9)	LTE-TDD	8.37	± 9.6 %
10496	AAF	LTE-TDD (SC-FDMA, 50% RB, 20 MHz, 64-QAM, UL Subframe=2,3,4,7,8,9)	LTE-TDD	8.54	± 9.6 %
10497	AAA	LTE-TDD (SC-FDMA, 100% RB, 1.4 MHz, QPSK, UL Subframe=2,3,4,7,8,9)	LTE-TDD	7.67	± 9.6 %
10498	AAA	LTE-TDD (SC-FDMA, 100% RB, 1.4 MHz, 16-QAM, UL Subframe=2,3,4,7,8,9)	LTE-TDD	8.40	± 9.6 %
10499	AAA	LTE-TDD (SC-FDMA, 100% RB, 1.4 MHz, 64-QAM, UL Subframe=2,3,4,7,8,9)	LTE-TDD	8.68	± 9.6 %
10500	AAB	LTE-TDD (SC-FDMA, 100% RB, 3 MHz, QPSK, UL Subframe=2,3,4,7,8,9)	LTE-TDD	7.67	± 9.6 %
10501	AAB	LTE-TDD (SC-FDMA, 100% RB, 3 MHz, 16-QAM, UL Subframe=2,3,4,7,8,9)	LTE-TDD	8.44	± 9.6 %
10502	AAB	LTE-TDD (SC-FDMA, 100% RB, 3 MHz, 64-QAM, UL Subframe=2,3,4,7,8,9)	LTE-TDD	8.52	± 9.6 %
10503	AAE	LTE-TDD (SC-FDMA, 100% RB, 5 MHz, QPSK, UL Subframe=2,3,4,7,8,9)	LTE-TDD	7.72	± 9.6 %
10504	AAE	LTE-TDD (SC-FDMA, 100% RB, 5 MHz, 16-QAM, UL Subframe=2,3,4,7,8,9)	LTE-TDD	8.31	± 9.6 %
10505	AAE	LTE-TDD (SC-FDMA, 100% RB, 5 MHz, 64-QAM, UL Subframe=2,3,4,7,8,9)	LTE-TDD	8.54	± 9.6 %
10506	AAE	LTE-TDD (SC-FDMA, 100% RB, 10 MHz, QPSK, UL Subframe=2,3,4,7,8,9)	LTE-TDD	7.74	± 9.6 %
10507	AAE	LTE-TDD (SC-FDMA, 100% RB, 10 MHz, 16-QAM, UL Subframe=2,3,4,7,8,9)	LTE-TDD	8.36	± 9.6 %
10508	AAE	LTE-TDD (SC-FDMA, 100% RB, 10 MHz, 64-QAM, UL Subframe=2,3,4,7,8,9)	LTE-TDD	8.55	± 9.6 %
10509	AAE	LTE-TDD (SC-FDMA, 100% RB, 15 MHz, QPSK, UL Subframe=2,3,4,7,8,9)	LTE-TDD	7.99	± 9.6 %
10510	AAE	LTE-TDD (SC-FDMA, 100% RB, 15 MHz, 16-QAM, UL Subframe=2,3,4,7,8,9)	LTE-TDD	8.49	± 9.6 %
10511	AAE	LTE-TDD (SC-FDMA, 100% RB, 15 MHz, 64-QAM, UL Subframe=2,3,4,7,8,9)	LTE-TDD	8.51	± 9.6 %
10512	AAF	LTE-TDD (SC-FDMA, 100% RB, 20 MHz, QPSK, UL Subframe=2,3,4,7,8,9)	LTE-TDD	7.74	± 9.6 %
10513	AAF	LTE-TDD (SC-FDMA, 100% RB, 20 MHz, 16-QAM, UL Subframe=2,3,4,7,8,9)	LTE-TDD	8.42	± 9.6 %
10514	AAF	LTE-TDD (SC-FDMA, 100% RB, 20 MHz, 64-QAM, UL Subframe=2,3,4,7,8,9)	LTE-TDD	8.45	± 9.6 %
10515	AAA	IEEE 802.11b WiFi 2.4 GHz (DSSS, 2 Mbps, 99pc duty cycle)	WLAN	1.58	± 9.6 %
10516	AAA	IEEE 802.11b WiFi 2.4 GHz (DSSS, 5.5 Mbps, 99pc duty cycle)	WLAN	1.57	± 9.6 %
10517	AAA	IEEE 802.11b WiFi 2.4 GHz (DSSS, 11 Mbps, 99pc duty cycle)	WLAN	1.58	± 9.6 %
10518	AAB	IEEE 802.11a/h WiFi 5 GHz (OFDM, 9 Mbps, 99pc duty cycle)	WLAN	8.23	± 9.6 %
10519	AAB	IEEE 802.11a/h WiFi 5 GHz (OFDM, 12 Mbps, 99pc duty cycle)	WLAN	8.39	± 9.6 %
10520	AAB	IEEE 802.11a/h WiFi 5 GHz (OFDM, 18 Mbps, 99pc duty cycle)	WLAN	8.12	± 9.6 %
10521	AAB	IEEE 802.11a/h WiFi 5 GHz (OFDM, 24 Mbps, 99pc duty cycle)	WLAN	7.97	± 9.6 %
10522	AAB	IEEE 802.11a/h WiFi 5 GHz (OFDM, 36 Mbps, 99pc duty cycle)	WLAN	8.45	± 9.6 %
10523	AAB	IEEE 802.11a/h WiFi 5 GHz (OFDM, 48 Mbps, 99pc duty cycle)	WLAN	8.08	± 9.6 %
10524	AAB	IEEE 802.11a/h WiFi 5 GHz (OFDM, 54 Mbps, 99pc duty cycle)	WLAN	8.27	± 9.6 %
10525	AAB	IEEE 802.11ac WiFi (20MHz, MCS0, 99pc duty cycle)	WLAN	8.36	± 9.6 %
10526	AAB	IEEE 802.11ac WiFi (20MHz, MCS1, 99pc duty cycle)	WLAN	8.42	± 9.6 %
10527	AAB	IEEE 802.11ac WiFi (20MHz, MCS2, 99pc duty cycle)	WLAN	8.21	± 9.6 %
10528	AAB	IEEE 802.11ac WiFi (20MHz, MCS3, 99pc duty cycle)	WLAN	8.36	± 9.6 %
10529	AAB	IEEE 802.11ac WiFi (20MHz, MCS4, 99pc duty cycle)	WLAN	8.36	± 9.6 %
10531	AAB	IEEE 802.11ac WiFi (20MHz, MCS6, 99pc duty cycle)	WLAN	8.43	± 9.6 %
10532	AAB	IEEE 802.11ac WiFi (20MHz, MCS7, 99pc duty cycle)	WLAN	8.29	± 9.6 %
10533	AAB	IEEE 802.11ac WiFi (20MHz, MCS8, 99pc duty cycle)	WLAN	8.38	± 9.6 %
10534	AAB	IEEE 802.11ac WiFi (40MHz, MCS0, 99pc duty cycle)	WLAN	8.45	± 9.6 %

ONETECH Corp.: 43-14, Jinsaegol-gil, Chowol-eup, Gwangju-si, Gyeonggi-do, 12735, Korea (TEL: 82-31-799-9500, FAX: 82-31-799-9599)

EX3DV4– SN:3832 February 27, 2019

10535	AAB	IEEE 802.11ac WiFi (40MHz, MCS1, 99pc duty cycle)	WLAN	8.45	± 9.6 %
10536	AAB	IEEE 802.11ac WiFi (40MHz, MCS2, 99pc duty cycle)	WLAN	8.32	± 9.6 %
10537	AAB	IEEE 802.11ac WiFi (40MHz, MCS3, 99pc duty cycle)	WLAN	8.44	± 9.6 %
10538	AAB	IEEE 802.11ac WiFi (40MHz, MCS4, 99pc duty cycle)	WLAN	8.54	± 9.6 %
10540	AAB	IEEE 802.11ac WiFi (40MHz, MCS6, 99pc duty cycle)	WLAN	8.39	± 9.6 %
10541	AAB	IEEE 802.11ac WiFi (40MHz, MCS7, 99pc duty cycle)	WLAN	8.46	± 9.6 %
10542	AAB	IEEE 802.11ac WiFi (40MHz, MCS8, 99pc duty cycle)	WLAN	8.65	± 9.6 %
10543	AAB	IEEE 802.11ac WiFi (40MHz, MCS9, 99pc duty cycle)	WLAN	8.65	± 9.6 %
10544	AAB	IEEE 802.11ac WiFi (80MHz, MCS0, 99pc duty cycle)	WLAN	8.47	± 9.6 %
10545	AAB	IEEE 802.11ac WiFi (80MHz, MCS1, 99pc duty cycle)	WLAN	8.55	± 9.6 %
10546	AAB	IEEE 802.11ac WiFi (80MHz, MCS2, 99pc duty cycle)	WLAN	8.35	± 9.6 %
10547	AAB	IEEE 802.11ac WiFi (80MHz, MCS3, 99pc duty cycle)	WLAN	8.49	± 9.6 %
10548	AAB	IEEE 802.11ac WiFi (80MHz, MCS4, 99pc duty cycle)	WLAN	8.37	± 9.6 %
10550	AAB	IEEE 802.11ac WiFi (80MHz, MCS6, 99pc duty cycle)	WLAN	8.38	± 9.6 %
10551	AAB	IEEE 802.11ac WiFi (80MHz, MCS7, 99pc duty cycle)	WLAN	8.50	± 9.6 %
10552	AAB	IEEE 802.11ac WiFi (80MHz, MCS8, 99pc duty cycle)	WLAN	8.42	± 9.6 %
10553	AAB	IEEE 802.11ac WiFi (80MHz, MCS9, 99pc duty cycle)	WLAN	8.45	± 9.6 %
10554	AAC	IEEE 802.11ac WiFi (160MHz, MCS0, 99pc duty cycle)	WLAN	8.48	± 9.6 %
10555	AAC	IEEE 802.11ac WiFi (160MHz, MCS1, 99pc duty cycle)	WLAN	8.47	± 9.6 %
10556	AAC	IEEE 802.11ac WiFi (160MHz, MCS2, 99pc duty cycle)	WLAN	8.50	± 9.6 %
10557	AAC	IEEE 802.11ac WiFi (160MHz, MCS3, 99pc duty cycle)	WLAN	8.52	± 9.6 %
10558	AAC	IEEE 802.11ac WiFi (160MHz, MCS4, 99pc duty cycle)	WLAN	8.61	± 9.6 %
10560	AAC	IEEE 802.11ac WiFi (160MHz, MCS6, 99pc duty cycle)	WLAN	8.73	± 9.6 %
10561	AAC	IEEE 802.11ac WiFi (160MHz, MCS7, 99pc duty cycle)	WLAN	8.56	± 9.6 %
10562	AAC	IEEE 802.11ac WiFi (160MHz, MCS8, 99pc duty cycle)	WLAN	8.69	± 9.6 %
10563	AAC	IEEE 802.11ac WiFi (160MHz, MCS9, 99pc duty cycle)	WLAN	8.77	± 9.6 %
10564	AAA	IEEE 802.11g WiFi 2.4 GHz (DSSS-OFDM, 9 Mbps, 99pc duty cycle)	WLAN	8.25	± 9.6 %
10565	AAA	IEEE 802.11g WiFi 2.4 GHz (DSSS-OFDM, 12 Mbps, 99pc duty cycle)	WLAN	8.45	± 9.6 %
10566	AAA	IEEE 802.11g WiFi 2.4 GHz (DSSS-OFDM, 18 Mbps, 99pc duty cycle)	WLAN	8.13	± 9.6 %
10567	AAA	IEEE 802.11g WiFi 2.4 GHz (DSSS-OFDM, 24 Mbps, 99pc duty cycle)	WLAN	8.00	± 9.6 %
10568	AAA	IEEE 802.11g WiFi 2.4 GHz (DSSS-OFDM, 36 Mbps, 99pc duty cycle)	WLAN	8.37	± 9.6 %
10569	AAA	IEEE 802.11g WiFi 2.4 GHz (DSSS-OFDM, 48 Mbps, 99pc duty cycle)	WLAN	8.10	± 9.6 %
10570	AAA	IEEE 802.11g WiFi 2.4 GHz (DSSS-OFDM, 54 Mbps, 99pc duty cycle)	WLAN	8.30	± 9.6 %
10571	AAA	IEEE 802.11b WiFi 2.4 GHz (DSSS, 1 Mbps, 90pc duty cycle)	WLAN	1.99	± 9.6 %
10572	AAA	IEEE 802.11b WiFi 2.4 GHz (DSSS, 2 Mbps, 90pc duty cycle)	WLAN	1.99	± 9.6 %
10573	AAA	IEEE 802.11b WiFi 2.4 GHz (DSSS, 5.5 Mbps, 90pc duty cycle)	WLAN	1.98	± 9.6 %
10574	AAA	IEEE 802.11b WiFi 2.4 GHz (DSSS, 11 Mbps, 90pc duty cycle)	WLAN	1.98	± 9.6 %
10575	AAA	IEEE 802.11g WiFi 2.4 GHz (DSSS-OFDM, 6 Mbps, 90pc duty cycle)	WLAN	8.59	± 9.6 %
10576	AAA	IEEE 802.11g WiFi 2.4 GHz (DSSS-OFDM, 9 Mbps, 90pc duty cycle)	WLAN	8.60	± 9.6 %
10577	AAA	IEEE 802.11g WiFi 2.4 GHz (DSSS-OFDM, 12 Mbps, 90pc duty cycle)	WLAN	8.70	± 9.6 %
10578	AAA	IEEE 802.11g WiFi 2.4 GHz (DSSS-OFDM, 18 Mbps, 90pc duty cycle)	WLAN	8.49	± 9.6 %
10579	AAA	IEEE 802.11g WiFi 2.4 GHz (DSSS-OFDM, 24 Mbps, 90pc duty cycle)	WLAN	8.36	± 9.6 %
10580	AAA	IEEE 802.11g WiFi 2.4 GHz (DSSS-OFDM, 36 Mbps, 90pc duty cycle)	WLAN	8.76	± 9.6 %
10581	AAA	IEEE 802.11g WiFi 2.4 GHz (DSSS-OFDM, 48 Mbps, 90pc duty cycle)	WLAN	8.35	± 9.6 %
10582	AAA	IEEE 802.11g WiFi 2.4 GHz (DSSS-OFDM, 54 Mbps, 90pc duty cycle)	WLAN	8.67	± 9.6 %
10583	AAB	IEEE 802.11a/h WiFi 5 GHz (OFDM, 6 Mbps, 90pc duty cycle)	WLAN	8.59	± 9.6 %
10584	AAB	IEEE 802.11a/h WiFi 5 GHz (OFDM, 9 Mbps, 90pc duty cycle)	WLAN	8.60	± 9.6 %
10585	AAB	IEEE 802.11a/h WiFi 5 GHz (OFDM, 12 Mbps, 90pc duty cycle)	WLAN	8.70	± 9.6 %
10586	AAB	IEEE 802.11a/h WiFi 5 GHz (OFDM, 18 Mbps, 90pc duty cycle)	WLAN	8.49	± 9.6 %
10587	AAB	IEEE 802.11a/h WiFi 5 GHz (OFDM, 24 Mbps, 90pc duty cycle)	WLAN	8.36	± 9.6 %

Certificate No: EX3-3832_Feb19 Page 17 of 20

10588	AAB	IEEE 802.11a/h WiFi 5 GHz (OFDM, 36 Mbps, 90pc duty cycle)	WLAN	8.76	± 9.6 %
10589	AAB	IEEE 802.11a/h WiFi 5 GHz (OFDM, 48 Mbps, 90pc duty cycle)	WLAN	8.35	± 9.6 %
10590	AAB	IEEE 802.11a/h WiFi 5 GHz (OFDM, 54 Mbps, 90pc duty cycle)	WLAN	8.67	± 9.6 %
10591	AAB	IEEE 802.11n (HT Mixed, 20MHz, MCS0, 90pc duty cycle)	WLAN	8.63	± 9.6 %
10592	AAB	IEEE 802.11n (HT Mixed, 20MHz, MCS1, 90pc duty cycle)	WLAN	8.79	± 9.6 %
10593	AAB	IEEE 802.11n (HT Mixed, 20MHz, MCS2, 90pc duty cycle)	WLAN	8.64	± 9.6 %
10594	AAB	IEEE 802.11n (HT Mixed, 20MHz, MCS3, 90pc duty cycle)	WLAN	8.74	± 9.6 %
10595	AAB	IEEE 802.11n (HT Mixed, 20MHz, MCS4, 90pc duty cycle)	WLAN	8.74	± 9.6 %
10596	AAB	IEEE 802.11n (HT Mixed, 20MHz, MCS5, 90pc duty cycle)	WLAN	8.71	± 9.6 %
10597	AAB	IEEE 802.11n (HT Mixed, 20MHz, MCS6, 90pc duty cycle)	WLAN	8.72	± 9.6 %
10598	AAB	IEEE 802.11n (HT Mixed, 20MHz, MCS7, 90pc duty cycle)	WLAN	8.50	± 9.6 %
10599	AAB	IEEE 802.11n (HT Mixed, 40MHz, MCS0, 90pc duty cycle)	WLAN	8.79	± 9.6 %
10600	AAB	IEEE 802.11n (HT Mixed, 40MHz, MCS1, 90pc duty cycle)	WLAN	8.88	± 9.6 %
10601	AAB	IEEE 802.11n (HT Mixed, 40MHz, MCS2, 90pc duty cycle)	WLAN	8.82	± 9.6 %
10602	AAB	IEEE 802.11n (HT Mixed, 40MHz, MCS3, 90pc duty cycle)	WLAN	8.94	± 9.6 %
10603	AAB	IEEE 802.11n (HT Mixed, 40MHz, MCS4, 90pc duty cycle)	WLAN	9.03	± 9.6 %
10604	AAB	IEEE 802.11n (HT Mixed, 40MHz, MCS5, 90pc duty cycle)	WLAN	8.76	± 9.6 %
10605	AAB	IEEE 802.11n (HT Mixed, 40MHz, MCS6, 90pc duty cycle)	WLAN	8.97	± 9.6 %
10606	AAB	IEEE 802.11n (HT Mixed, 40MHz, MCS7, 90pc duty cycle)	WLAN	8.82	± 9.6 %
10607	AAB	IEEE 802.11ac WiFi (20MHz, MCS0, 90pc duty cycle)	WLAN	8.64	± 9.6 %
10608	AAB	IEEE 802.11ac WiFi (20MHz, MCS1, 90pc duty cycle)	WLAN	8.77	± 9.6 %
10609	AAB	IEEE 802.11ac WiFi (20MHz, MCS2, 90pc duty cycle)	WLAN	8.57	± 9.6 %
10610	AAB	IEEE 802.11ac WiFi (20MHz, MCS3, 90pc duty cycle)	WLAN	8.78	± 9.6 %
10611	AAB	IEEE 802.11ac WiFi (20MHz, MCS4, 90pc duty cycle)	WLAN	8.70	± 9.6 %
10612	AAB	IEEE 802.11ac WiFi (20MHz, MCS5, 90pc duty cycle)	WLAN	8.77	± 9.6 %
10613	AAB	IEEE 802.11ac WiFi (20MHz, MCS6, 90pc duty cycle)	WLAN	8.94	± 9.6 %
10614	AAB	IEEE 802.11ac WiFi (20MHz, MCS7, 90pc duty cycle)	WLAN	8.59	± 9.6 %
10615	AAB	IEEE 802.11ac WiFi (20MHz, MCS8, 90pc duty cycle)	WLAN	8.82	± 9.6 %
10616	AAB	IEEE 802.11ac WiFi (40MHz, MCS0, 90pc duty cycle)	WLAN	8.82	± 9.6 %
10617	AAB	IEEE 802.11ac WiFi (40MHz, MCS1, 90pc duty cycle)	WLAN	8.81	± 9.6 %
10618	AAB	IEEE 802.11ac WiFi (40MHz, MCS2, 90pc duty cycle)	WLAN	8.58	± 9.6 %
10619	AAB	IEEE 802.11ac WiFi (40MHz, MCS3, 90pc duty cycle)	WLAN	8.86	± 9.6 %
10620	AAB	IEEE 802.11ac WiFi (40MHz, MCS4, 90pc duty cycle)	WLAN	8.87	± 9.6 %
10621	AAB	IEEE 802.11ac WiFi (40MHz, MCS5, 90pc duty cycle)	WLAN	8.77	± 9.6 %
10622	AAB	IEEE 802.11ac WiFi (40MHz, MCS6, 90pc duty cycle)	WLAN	8.68	± 9.6 %
10623	AAB	IEEE 802.11ac WiFi (40MHz, MCS7, 90pc duty cycle)	WLAN	8.82	± 9.6 %
10624	AAB	IEEE 802.11ac WiFi (40MHz, MCS8, 90pc duty cycle)	WLAN	8.96	± 9.6 %
10625	AAB	IEEE 802.11ac WiFi (40MHz, MCS9, 90pc duty cycle)	WLAN	8.96	± 9.6 %
10626	AAB	IEEE 802.11ac WiFi (80MHz, MCS0, 90pc duty cycle)	WLAN	8.83	± 9.6 %
10627	AAB	IEEE 802.11ac WiFi (80MHz, MCS1, 90pc duty cycle)	WLAN	8.88	± 9.6 %
10628	AAB	IEEE 802.11ac WiFi (80MHz, MCS2, 90pc duty cycle)	WLAN	8.71	± 9.6 %
10629	AAB	IEEE 802.11ac WiFi (80MHz, MCS3, 90pc duty cycle)	WLAN	8.85	± 9.6 %
10630	AAB	IEEE 802.11ac WiFi (80MHz, MCS4, 90pc duty cycle)	WLAN	8.72	± 9.6 %
10631	AAB	IEEE 802.11ac WiFi (80MHz, MCS5, 90pc duty cycle)	WLAN	8.81	± 9.6 %
10632	AAB	IEEE 802.11ac WiFi (80MHz, MCS6, 90pc duty cycle)	WLAN	8.74	± 9.6 %
10633	AAB	IEEE 802.11ac WiFi (80MHz, MCS7, 90pc duty cycle)	WLAN	8.83	± 9.6 %
10634	AAB	IEEE 802.11ac WiFi (80MHz, MCS8, 90pc duty cycle)	WLAN	8.80	± 9.6 %
10635	AAB	IEEE 802.11ac WiFi (80MHz, MCS9, 90pc duty cycle)	WLAN	8.81	± 9.6 %
10636	AAC	IEEE 802.11ac WiFi (160MHz, MCS0, 90pc duty cycle)	WLAN	8.83	± 9.6 %
10637	AAC	IEEE 802.11ac WiFi (160MHz, MCS1, 90pc duty cycle)	WLAN	8.79	± 9.6 %
10638	AAC	IEEE 802.11ac WiFi (160MHz, MCS2, 90pc duty cycle)	WLAN	8.86	± 9.6 %
10639	AAC	IEEE 802.11ac WiFi (160MHz, MCS3, 90pc duty cycle)	WLAN	8.85	± 9.6 %
10640	AAC	IEEE 802.11ac WiFi (160MHz, MCS4, 90pc duty cycle)	WLAN	8.98	± 9.6 %
10641	AAC	IEEE 802.11ac WiFi (160MHz, MCS5, 90pc duty cycle)	WLAN	9.06	± 9.6 %
10642	AAC	IEEE 802.11ac WiFi (160MHz, MCS6, 90pc duty cycle)	WLAN	9.06	± 9.6 %
10643	AAC	IEEE 802.11ac WiFi (160MHz, MCS7, 90pc duty cycle)	WLAN	8.89	± 9.6 %
10644	AAC	IEEE 802.11ac WiFi (160MHz, MCS8, 90pc duty cycle)	WLAN	9.05	± 9.6 %
10645	AAC	IEEE 802.11ac WiFi (160MHz, MCS9, 90pc duty cycle)	WLAN	9.11	± 9.6 %
10646	AAF	LTE-TDD (SC-FDMA, 1 RB, 5 MHz, QPSK, UL Subframe=2,7)	LTE-TDD	11.96	± 9.6 %
10647	AAF	LTE-TDD (SC-FDMA, 1 RB, 20 MHz, QPSK, UL Subframe=2,7)	LTE-TDD	11.96	± 9.6 %
10648	AAA	CDMA2000 (1x Advanced)	CDMA2000	3.45	± 9.6 %
10652	AAD	LTE-TDD (OFDMA, 5 MHz, E-TM 3.1, Clipping 44%)	LTE-TDD	6.91	± 9.6 %
10653	AAD	LTE-TDD (OFDMA, 10 MHz, E-TM 3.1, Clipping 44%)	LTE-TDD	7.42	± 9.6 %
10654	AAD	LTE-TDD (OFDMA, 15 MHz, E-TM 3.1, Clipping 44%)	LTE-TDD	6.96	± 9.6 %

ONETECH Corp.: 43-14, Jinsaegol-gil, Chowol-eup, Gwangju-si, Gyeonggi-do, 12735, Korea (TEL: 82-31-799-9500, FAX: 82-31-799-9599)

EX3DV4– SN:3832 February 27, 2019

10655	AAE	LTE-TDD (OFDMA, 20 MHz, E-TM 3.1, Clipping 44%)	LTE-TDD	7.21	± 9.6 %
10658	AAA	Pulse Waveform (200Hz, 10%)	Test	10.00	± 9.6 %
10659	AAA	Pulse Waveform (200Hz, 20%)	Test	6.99	± 9.6 %
10660	AAA	Pulse Waveform (200Hz, 40%)	Test	3.98	± 9.6 %
10661	AAA	Pulse Waveform (200Hz, 60%)	Test	2.22	± 9.6 %
10662	AAA	Pulse Waveform (200Hz, 80%)	Test	0.97	± 9.6 %
10670	AAA	Bluetooth Low Energy	Bluetooth	2.19	± 9.6 %
10671	AAA	IEEE 802.11ax (20MHz, MCS0, 90pc duty cycle)	WLAN	9.09	± 9.6 %
10672	AAA	IEEE 802.11ax (20MHz, MCS1, 90pc duty cycle)	WLAN	8.57	± 9.6 %
10673	AAA	IEEE 802.11ax (20MHz, MCS2, 90pc duty cycle)	WLAN	8.78	± 9.6 %
10674	AAA	IEEE 802.11ax (20MHz, MCS3, 90pc duty cycle)	WLAN	8.74	± 9.6 %
10675	AAA	IEEE 802.11ax (20MHz, MCS4, 90pc duty cycle)	WLAN	8.90	± 9.6 %
10676	AAA	IEEE 802.11ax (20MHz, MCS5, 90pc duty cycle)	WLAN	8.77	± 9.6 %
10677	AAA	IEEE 802.11ax (20MHz, MCS6, 90pc duty cycle)	WLAN	8.73	± 9.6 %
10678	AAA	IEEE 802.11ax (20MHz, MCS7, 90pc duty cycle)	WLAN	8.78	± 9.6 %
10679	AAA	IEEE 802.11ax (20MHz, MCS8, 90pc duty cycle)	WLAN	8.89	± 9.6 %
10680	AAA	IEEE 802.11ax (20MHz, MCS9, 90pc duty cycle)	WLAN	8.80	± 9.6 %
10681	AAA	IEEE 802.11ax (20MHz, MCS10, 90pc duty cycle)	WLAN	8.62	± 9.6 %
10682	AAA	IEEE 802.11ax (20MHz, MCS11, 90pc duty cycle)	WLAN	8.83	± 9.6 %
10683	AAA	IEEE 802.11ax (20MHz, MCS0, 99pc duty cycle)	WLAN	8.42	± 9.6 %
10684	AAA	IEEE 802.11ax (20MHz, MCS1, 99pc duty cycle)	WLAN	8.26	± 9.6 %
10685	AAA	IEEE 802.11ax (20MHz, MCS2, 99pc duty cycle)	WLAN	8.33	± 9.6 %
10686	AAA	IEEE 802.11ax (20MHz, MCS3, 99pc duty cycle)	WLAN	8.28	± 9.6 %
10687	AAA	IEEE 802.11ax (20MHz, MCS4, 99pc duty cycle)	WLAN	8.45	± 9.6 %
10688	AAA	IEEE 802.11ax (20MHz, MCS5, 99pc duty cycle)	WLAN	8.29	± 9.6 %
10689	AAA	IEEE 802.11ax (20MHz, MCS6, 99pc duty cycle)	WLAN	8.55	± 9.6 %
10690	AAA	IEEE 802.11ax (20MHz, MCS7, 99pc duty cycle)	WLAN	8.29	± 9.6 %
10691	AAA	IEEE 802.11ax (20MHz, MCS8, 99pc duty cycle)	WLAN	8.25	± 9.6 %
10692	AAA	IEEE 802.11ax (20MHz, MCS9, 99pc duty cycle)	WLAN	8.29	± 9.6 %
10693	AAA	IEEE 802.11ax (20MHz, MCS10, 99pc duty cycle)	WLAN	8.25	± 9.6 %
10694	AAA	IEEE 802.11ax (20MHz, MCS11, 99pc duty cycle)	WLAN	8.57	± 9.6 %
10695	AAA	IEEE 802.11ax (40MHz, MCS0, 90pc duty cycle)	WLAN	8.78	± 9.6 %
10696	AAA	IEEE 802.11ax (40MHz, MCS1, 90pc duty cycle)	WLAN	8.91	± 9.6 %
10697	AAA	IEEE 802.11ax (40MHz, MCS2, 90pc duty cycle)	WLAN	8.61	± 9.6 %
10698	AAA	IEEE 802.11ax (40MHz, MCS3, 90pc duty cycle)	WLAN	8.89	± 9.6 %
10699	AAA	IEEE 802.11ax (40MHz, MCS4, 90pc duty cycle)	WLAN	8.82	± 9.6 %
10700	AAA	IEEE 802.11ax (40MHz, MCS5, 90pc duty cycle)	WLAN	8.73	± 9.6 %
10701	AAA	IEEE 802.11ax (40MHz, MCS6, 90pc duty cycle)	WLAN	8.86	± 9.6 %
10702	AAA	IEEE 802.11ax (40MHz, MCS7, 90pc duty cycle)	WLAN	8.70	± 9.6 %
10703	AAA	IEEE 802.11ax (40MHz, MCS8, 90pc duty cycle)	WLAN	8.82	± 9.6 %
10704	AAA	IEEE 802.11ax (40MHz, MCS9, 90pc duty cycle)	WLAN	8.56	± 9.6 %
10705	AAA	IEEE 802.11ax (40MHz, MCS10, 90pc duty cycle)	WLAN	8.69	± 9.6 %
10706	AAA	IEEE 802.11ax (40MHz, MCS11, 90pc duty cycle)	WLAN	8.66	± 9.6 %
10707	AAA	IEEE 802.11ax (40MHz, MCS0, 99pc duty cycle)	WLAN	8.32	± 9.6 %
10708	AAA	IEEE 802.11ax (40MHz, MCS1, 99pc duty cycle)	WLAN	8.55	± 9.6 %
10709	AAA	IEEE 802.11ax (40MHz, MCS2, 99pc duty cycle)	WLAN	8.33	± 9.6 %
10710	AAA	IEEE 802.11ax (40MHz, MCS3, 99pc duty cycle)	WLAN	8.29	± 9.6 %
10711	AAA	IEEE 802.11ax (40MHz, MCS4, 99pc duty cycle)	WLAN	8.39	± 9.6 %
10712	AAA	IEEE 802.11ax (40MHz, MCS5, 99pc duty cycle)	WLAN	8.67	± 9.6 %
10713	AAA	IEEE 802.11ax (40MHz, MCS6, 99pc duty cycle)	WLAN	8.33	± 9.6 %
10714	AAA	IEEE 802.11ax (40MHz, MCS7, 99pc duty cycle)	WLAN	8.26	± 9.6 %
10715	AAA	IEEE 802.11ax (40MHz, MCS8, 99pc duty cycle)	WLAN	8.45	± 9.6 %
10716	AAA	IEEE 802.11ax (40MHz, MCS9, 99pc duty cycle)	WLAN	8.30	± 9.6 %
10717	AAA	IEEE 802.11ax (40MHz, MCS10, 99pc duty cycle)	WLAN	8.48	± 9.6 %
10718	AAA	IEEE 802.11ax (40MHz, MCS11, 99pc duty cycle)	WLAN	8.24	± 9.6 %
10719	AAA	IEEE 802.11ax (80MHz, MCS0, 90pc duty cycle)	WLAN	8.81	± 9.6 %
10720	AAA	IEEE 802.11ax (80MHz, MCS1, 90pc duty cycle)	WLAN	8.87	± 9.6 %
10721	AAA	IEEE 802.11ax (80MHz, MCS2, 90pc duty cycle)	WLAN	8.76	± 9.6 %
10722	AAA	IEEE 802.11ax (80MHz, MCS3, 90pc duty cycle)	WLAN	8.55	± 9.6 %
10723	AAA	IEEE 802.11ax (80MHz, MCS4, 90pc duty cycle)	WLAN	8.70	± 9.6 %
10724	AAA	IEEE 802.11ax (80MHz, MCS5, 90pc duty cycle)	WLAN	8.90	± 9.6 %
10725	AAA	IEEE 802.11ax (80MHz, MCS6, 90pc duty cycle)	WLAN	8.74	± 9.6 %
10726	AAA	IEEE 802.11ax (80MHz, MCS7, 90pc duty cycle)	WLAN	8.72	± 9.6 %
10727	AAA	IEEE 802.11ax (80MHz, MCS8, 90pc duty cycle)	WLAN	8.66	± 9.6 %

Certificate No: EX3-3832_Feb19 Page 19 of 20

EX3DV4– SN:3832 February 27, 2019

10728	AAA	IEEE 802.11ax (80MHz, MCS9, 90pc duty cycle)	WLAN	8.65	± 9.6 %
10729	AAA	IEEE 802.11ax (80MHz, MCS10, 90pc duty cycle)	WLAN	8.64	± 9.6 %
10730	AAA	IEEE 802.11ax (80MHz, MCS11, 90pc duty cycle)	WLAN	8.67	± 9.6 %
10731	AAA	IEEE 802.11ax (80MHz, MCS0, 99pc duty cycle)	WLAN	8.42	± 9.6 %
10732	AAA	IEEE 802.11ax (80MHz, MCS1, 99pc duty cycle)	WLAN	8.46	± 9.6 %
10733	AAA	IEEE 802.11ax (80MHz, MCS2, 99pc duty cycle)	WLAN	8.40	± 9.6 %
10734	AAA	IEEE 802.11ax (80MHz, MCS3, 99pc duty cycle)	WLAN	8.25	± 9.6 %
10735	AAA	IEEE 802.11ax (80MHz, MCS4, 99pc duty cycle)	WLAN	8.33	± 9.6 %
10736	AAA	IEEE 802.11ax (80MHz, MCS5, 99pc duty cycle)	WLAN	8.27	± 9.6 %
10737	AAA	IEEE 802.11ax (80MHz, MCS6, 99pc duty cycle)	WLAN	8.36	± 9.6 %
10738	AAA	IEEE 802.11ax (80MHz, MCS7, 99pc duty cycle)	WLAN	8.42	± 9.6 %
10739	AAA	IEEE 802.11ax (80MHz, MCS8, 99pc duty cycle)	WLAN	8.29	± 9.6 %
10740	AAA	IEEE 802.11ax (80MHz, MCS9, 99pc duty cycle)	WLAN	8.48	± 9.6 %
10741	AAA	IEEE 802.11ax (80MHz, MCS10, 99pc duty cycle)	WLAN	8.40	± 9.6 %
10742	AAA	IEEE 802.11ax (80MHz, MCS11, 99pc duty cycle)	WLAN	8.43	± 9.6 %
10743	AAA	IEEE 802.11ax (160MHz, MCS0, 90pc duty cycle)	WLAN	8.94	± 9.6 %
10744	AAA	IEEE 802.11ax (160MHz, MCS1, 90pc duty cycle)	WLAN	9.16	± 9.6 %
10745	AAA	IEEE 802.11ax (160MHz, MCS2, 90pc duty cycle)	WLAN	8.93	± 9.6 %
10746	AAA	IEEE 802.11ax (160MHz, MCS3, 90pc duty cycle)	WLAN	9.11	± 9.6 %
10747	AAA	IEEE 802.11ax (160MHz, MCS4, 90pc duty cycle)	WLAN	9.04	± 9.6 %
10748	AAA	IEEE 802.11ax (160MHz, MCS5, 90pc duty cycle)	WLAN	8.93	± 9.6 %
10749	AAA	IEEE 802.11ax (160MHz, MCS6, 90pc duty cycle)	WLAN	8.90	± 9.6 %
10750	AAA	IEEE 802.11ax (160MHz, MCS7, 90pc duty cycle)	WLAN	8.79	± 9.6 %
10751	AAA	IEEE 802.11ax (160MHz, MCS8, 90pc duty cycle)	WLAN	8.82	± 9.6 %
10752	AAA	IEEE 802.11ax (160MHz, MCS9, 90pc duty cycle)	WLAN	8.81	± 9.6 %
10753	AAA	IEEE 802.11ax (160MHz, MCS10, 90pc duty cycle)	WLAN	9.00	± 9.6 %
10754	AAA	IEEE 802.11ax (160MHz, MCS11, 90pc duty cycle)	WLAN	8.94	± 9.6 %
10755	AAA	IEEE 802.11ax (160MHz, MCS0, 99pc duty cycle)	WLAN	8.64	± 9.6 %
10756	AAA	IEEE 802.11ax (160MHz, MCS1, 99pc duty cycle)	WLAN	8.77	± 9.6 %
10757	AAA	IEEE 802.11ax (160MHz, MCS2, 99pc duty cycle)	WLAN	8.77	± 9.6 %
10758	AAA	IEEE 802.11ax (160MHz, MCS3, 99pc duty cycle)	WLAN	8.69	± 9.6 %
10759	AAA	IEEE 802.11ax (160MHz, MCS4, 99pc duty cycle)	WLAN	8.58	± 9.6 %
10760	AAA	IEEE 802.11ax (160MHz, MCS5, 99pc duty cycle)	WLAN	8.49	± 9.6 %
10761	AAA	IEEE 802.11ax (160MHz, MCS6, 99pc duty cycle)	WLAN	8.58	± 9.6 %
10762	AAA	IEEE 802.11ax (160MHz, MCS7, 99pc duty cycle)	WLAN	8.49	± 9.6 %
10763	AAA	IEEE 802.11ax (160MHz, MCS8, 99pc duty cycle)	WLAN	8.53	± 9.6 %
10764	AAA	IEEE 802.11ax (160MHz, MCS9, 99pc duty cycle)	WLAN	8.54	± 9.6 %
10765	AAA	IEEE 802.11ax (160MHz, MCS10, 99pc duty cycle)	WLAN	8.54	± 9.6 %
10766	AAA	IEEE 802.11ax (160MHz, MCS11, 99pc duty cycle)	WLAN	8.51	± 9.6 %

[E] Uncertainty is determined using the max. deviation from linear response applying rectangular distribution and is expressed for the square of the field value.

ONETECH Corp.: 43-14, Jinsaegol-gil, Chowol-eup, Gwangju-si, Gyeonggi-do, 12735, Korea (TEL: 82-31-799-9500, FAX: 82-31-799-9599)

Calibration Laboratory of
Schmid & Partner
Engineering AG
Zeughausstrasse 43, 8004 Zurich, Switzerland

S Schweizerischer Kalibrierdienst
C Service suisse d'étalonnage
Servizio svizzero di taratura
S Swiss Calibration Service

Accredited by the Swiss Accreditation Service (SAS)
The Swiss Accreditation Service is one of the signatories to the EA Multilateral Agreement for the recognition of calibration certificates

Accreditation No.: SCS 0108

Client **BV Korea (Dymstec)** **Certificate No: D900V2-1d069_Apr19**

CALIBRATION CERTIFICATE

Object	D900V2 - SN:1d069
Calibration procedure(s)	QA CAL-05.v11 Calibration Procedure for SAR Validation Sources between 0.7-3 GHz
Calibration date:	April 25, 2019

This calibration certificate documents the traceability to national standards, which realize the physical units of measurements (SI). The measurements and the uncertainties with confidence probability are given on the following pages and are part of the certificate.

All calibrations have been conducted in the closed laboratory facility: environment temperature (22 ± 3)°C and humidity < 70%.

Calibration Equipment used (M&TE critical for calibration)

Primary Standards	ID #	Cal Date (Certificate No.)	Scheduled Calibration
Power meter NRP	SN: 104778	03-Apr-19 (No. 217-02892/02893)	Apr-20
Power sensor NRP-Z91	SN: 103244	03-Apr-19 (No. 217-02892)	Apr-20
Power sensor NRP-Z91	SN: 103245	03-Apr-19 (No. 217-02893)	Apr-20
Reference 20 dB Attenuator	SN: 5058 (20k)	04-Apr-19 (No. 217-02894)	Apr-20
Type-N mismatch combination	SN: 5047.2 / 06327	04-Apr-19 (No. 217-02895)	Apr-20
Reference Probe EX3DV4	SN: 7349	31-Dec-18 (No. EX3-7349_Dec18)	Dec-19
DAE4	SN: 601	04-Oct-18 (No. DAE4-601_Oct18)	Oct-19

Secondary Standards	ID #	Check Date (in house)	Scheduled Check
Power meter E4419B	SN: GB39512475	07-Oct-15 (in house check Feb-19)	In house check: Oct-20
Power sensor HP 8481A	SN: US37292783	07-Oct-15 (in house check Oct-18)	In house check: Oct-20
Power sensor HP 8481A	SN: MY41092317	07-Oct-15 (in house check Oct-18)	In house check: Oct-20
RF generator R&S SMT-06	SN: 100972	15-Jun-15 (in house check Oct-18)	In house check: Oct-20
Network Analyzer Agilent E8358A	SN: US41080477	31-Mar-14 (in house check Oct-18)	In house check: Oct-19

	Name	Function	Signature
Calibrated by:	Claudio Leubler	Laboratory Technician	
Approved by:	Katja Pokovic	Technical Manager	

Issued: April 25, 2019

This calibration certificate shall not be reproduced except in full without written approval of the laboratory.

Certificate No: D900V2-1d069_Apr19 Page 1 of 8

Calibration Laboratory of
Schmid & Partner
Engineering AG
Zeughausstrasse 43, 8004 Zurich, Switzerland

S Schweizerischer Kalibrierdienst
C Service suisse d'étalonnage
Servizio svizzero di taratura
S Swiss Calibration Service

Accredited by the Swiss Accreditation Service (SAS)
The Swiss Accreditation Service is one of the signatories to the EA Multilateral Agreement for the recognition of calibration certificates

Accreditation No.: SCS 0108

Glossary:

TSL	tissue simulating liquid
ConvF	sensitivity in TSL / NORM x,y,z
N/A	not applicable or not measured

Calibration is Performed According to the Following Standards:

a) IEEE Std 1528-2013, "IEEE Recommended Practice for Determining the Peak Spatial-Averaged Specific Absorption Rate (SAR) in the Human Head from Wireless Communications Devices: Measurement Techniques", June 2013
b) IEC 62209-1, "Measurement procedure for the assessment of Specific Absorption Rate (SAR) from hand-held and body-mounted devices used next to the ear (frequency range of 300 MHz to 6 GHz)", July 2016
c) IEC 62209-2, "Procedure to determine the Specific Absorption Rate (SAR) for wireless communication devices used in close proximity to the human body (frequency range of 30 MHz to 6 GHz)", March 2010
d) KDB 865664, "SAR Measurement Requirements for 100 MHz to 6 GHz"

Additional Documentation:

e) DASY4/5 System Handbook

Methods Applied and Interpretation of Parameters:

- *Measurement Conditions:* Further details are available from the Validation Report at the end of the certificate. All figures stated in the certificate are valid at the frequency indicated.
- *Antenna Parameters with TSL:* The dipole is mounted with the spacer to position its feed point exactly below the center marking of the flat phantom section, with the arms oriented parallel to the body axis.
- *Feed Point Impedance and Return Loss:* These parameters are measured with the dipole positioned under the liquid filled phantom. The impedance stated is transformed from the measurement at the SMA connector to the feed point. The Return Loss ensures low reflected power. No uncertainty required.
- *Electrical Delay:* One-way delay between the SMA connector and the antenna feed point. No uncertainty required.
- *SAR measured:* SAR measured at the stated antenna input power.
- *SAR normalized:* SAR as measured, normalized to an input power of 1 W at the antenna connector.
- *SAR for nominal TSL parameters:* The measured TSL parameters are used to calculate the nominal SAR result.

The reported uncertainty of measurement is stated as the standard uncertainty of measurement multiplied by the coverage factor k=2, which for a normal distribution corresponds to a coverage probability of approximately 95%.

Measurement Conditions

DASY system configuration, as far as not given on page 1.

DASY Version	DASY5	V52.10.2
Extrapolation	Advanced Extrapolation	
Phantom	Modular Flat Phantom	
Distance Dipole Center - TSL	15 mm	with Spacer
Zoom Scan Resolution	dx, dy, dz = 5 mm	
Frequency	900 MHz ± 1 MHz	

Head TSL parameters

The following parameters and calculations were applied.

	Temperature	**Permittivity**	**Conductivity**
Nominal Head TSL parameters	22.0 °C	41.5	0.97 mho/m
Measured Head TSL parameters	(22.0 ± 0.2) °C	41.6 ± 6 %	0.94 mho/m ± 6 %
Head TSL temperature change during test	< 0.5 °C	----	----

SAR result with Head TSL

SAR averaged over 1 cm^3 (1 g) of Head TSL	Condition	
SAR measured	250 mW input power	2.68 W/kg
SAR for nominal Head TSL parameters	normalized to 1W	**11.0 W/kg ± 17.0 % (k=2)**

SAR averaged over 10 cm^3 (10 g) of Head TSL	condition	
SAR measured	250 mW input power	1.72 W/kg
SAR for nominal Head TSL parameters	normalized to 1W	**7.01 W/kg ± 16.5 % (k=2)**

Body TSL parameters

The following parameters and calculations were applied.

	Temperature	**Permittivity**	**Conductivity**
Nominal Body TSL parameters	22.0 °C	55.0	1.05 mho/m
Measured Body TSL parameters	(22.0 ± 0.2) °C	53.6 ± 6 %	1.04 mho/m ± 6 %
Body TSL temperature change during test	< 0.5 °C	----	----

SAR result with Body TSL

SAR averaged over 1 cm^3 (1 g) of Body TSL	Condition	
SAR measured	250 mW input power	2.76 W/kg
SAR for nominal Body TSL parameters	normalized to 1W	**11.1 W/kg ± 17.0 % (k=2)**

SAR averaged over 10 cm^3 (10 g) of Body TSL	condition	
SAR measured	250 mW input power	1.79 W/kg
SAR for nominal Body TSL parameters	normalized to 1W	**7.17 W/kg ± 16.5 % (k=2)**

Appendix (Additional assessments outside the scope of SCS 0108)

Antenna Parameters with Head TSL

Impedance, transformed to feed point	50.9 Ω - 3.1 jΩ
Return Loss	- 30.0 dB

Antenna Parameters with Body TSL

Impedance, transformed to feed point	47.1 Ω - 5.0 jΩ
Return Loss	- 24.5 dB

General Antenna Parameters and Design

Electrical Delay (one direction)	1.411 ns

After long term use with 100W radiated power, only a slight warming of the dipole near the feedpoint can be measured.

The dipole is made of standard semirigid coaxial cable. The center conductor of the feeding line is directly connected to the second arm of the dipole. The antenna is therefore short-circuited for DC-signals. On some of the dipoles, small end caps are added to the dipole arms in order to improve matching when loaded according to the position as explained in the "Measurement Conditions" paragraph. The SAR data are not affected by this change. The overall dipole length is still according to the Standard.
No excessive force must be applied to the dipole arms, because they might bend or the soldered connections near the feedpoint may be damaged.

Additional EUT Data

Manufactured by	SPEAG

ONETECH Corp.: 43-14, Jinsaegol-gil, Chowol-eup, Gwangju-si, Gyeonggi-do, 12735, Korea (TEL: 82-31-799-9500, FAX: 82-31-799-9599)

DASY5 Validation Report for Head TSL

Date: 25.04.2019

Test Laboratory: SPEAG, Zurich, Switzerland

DUT: Dipole 900 MHz; Type: D900V2; Serial: D900V2 - SN:1d069

Communication System: UID 0 - CW; Frequency: 900 MHz
Medium parameters used: f = 900 MHz; σ = 0.94 S/m; ε_r = 41.6; ρ = 1000 kg/m^3
Phantom section: Flat Section
Measurement Standard: DASY5 (IEEE/IEC/ANSI C63.19-2011)

DASY52 Configuration:

- Probe: EX3DV4 - SN7349; ConvF(9.61, 9.61, 9.61) @ 900 MHz; Calibrated: 31.12.2018
- Sensor-Surface: 1.4mm (Mechanical Surface Detection)
- Electronics: DAE4 Sn601; Calibrated: 04.10.2018
- Phantom: Flat Phantom 4.9 (front); Type: QD 00L P49 AA; Serial: 1001
- DASY52 52.10.2(1495); SEMCAD X 14.6.12(7450)

Dipole Calibration for Head Tissue/Pin=250 mW, d=15mm/Zoom Scan (7x7x7)/Cube 0:
Measurement grid: dx=5mm, dy=5mm, dz=5mm
Reference Value = 65.71 V/m; Power Drift = 0.01 dB
Peak SAR (extrapolated) = 4.10 W/kg
SAR(1 g) = 2.68 W/kg; SAR(10 g) = 1.72 W/kg
Maximum value of SAR (measured) = 3.61 W/kg

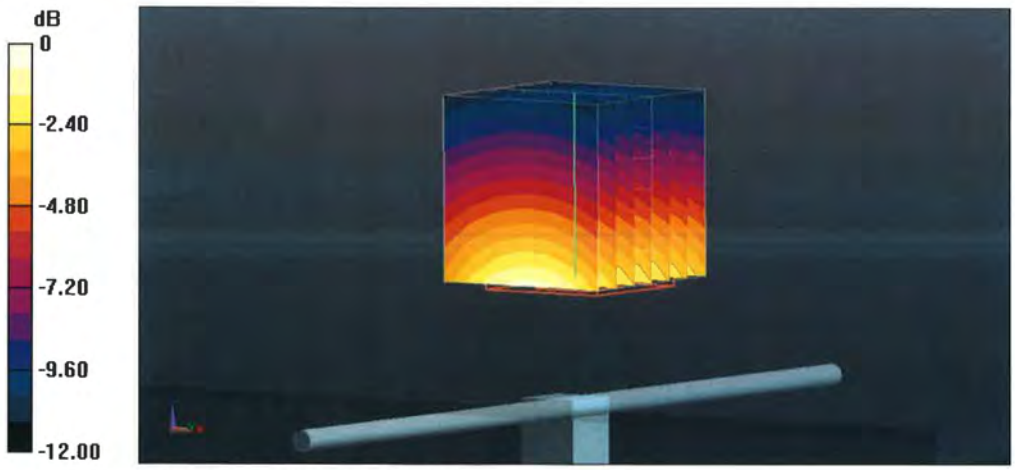

0 dB = 3.61 W/kg = 5.58 dBW/kg

ONETECH Corp.: 43-14, Jinsaegol-gil, Chowol-eup, Gwangju-si, Gyeonggi-do, 12735, Korea (TEL: 82-31-799-9500, FAX: 82-31-799-9599)

Impedance Measurement Plot for Head TSL

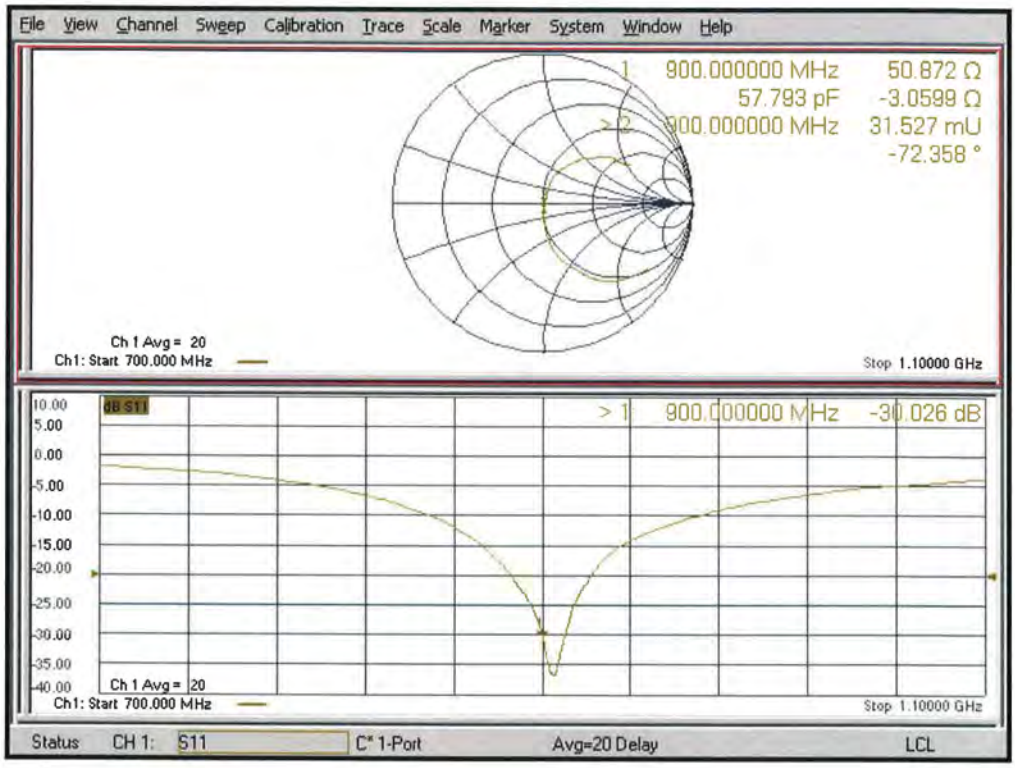

ONETECH Corp.: 43-14, Jinsaegol-gil, Chowol-eup, Gwangju-si, Gyeonggi-do, 12735, Korea (TEL: 82-31-799-9500, FAX: 82-31-799-9599)

DASY5 Validation Report for Body TSL

Date: 25.04.2019

Test Laboratory: SPEAG, Zurich, Switzerland

DUT: Dipole 900 MHz; Type: D900V2; Serial: D900V2 - SN:1d069

Communication System: UID 0 - CW; Frequency: 900 MHz
Medium parameters used: f = 900 MHz; σ = 1.04 S/m; ε_r = 53.6; ρ = 1000 kg/m^3
Phantom section: Flat Section
Measurement Standard: DASY5 (IEEE/IEC/ANSI C63.19-2011)

DASY52 Configuration:

- Probe: EX3DV4 - SN7349; ConvF(9.78, 9.78, 9.78) @ 900 MHz; Calibrated: 31.12.2018
- Sensor-Surface: 1.4mm (Mechanical Surface Detection)
- Electronics: DAE4 Sn601; Calibrated: 04.10.2018
- Phantom: Flat Phantom 4.9 (Back); Type: QD 00R P49 AA; Serial: 1005
- DASY52 52.10.2(1495); SEMCAD X 14.6.12(7450)

Dipole Calibration for Body Tissue/Pin=250 mW, d=15mm/Zoom Scan (7x7x7)/Cube 0:
Measurement grid: dx=5mm, dy=5mm, dz=5mm
Reference Value = 60.75 V/m; Power Drift = -0.00 dB
Peak SAR (extrapolated) = 4.08 W/kg
SAR(1 g) = 2.76 W/kg; SAR(10 g) = 1.79 W/kg
Maximum value of SAR (measured) = 3.67 W/kg

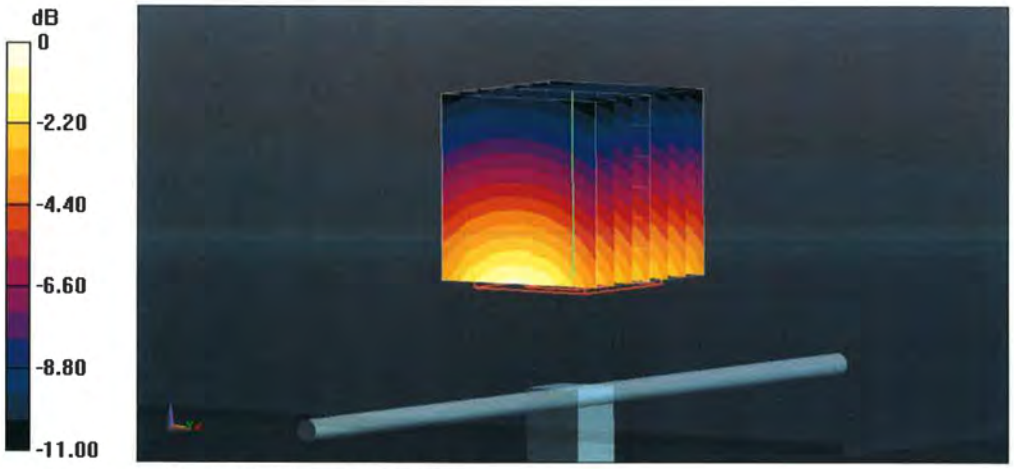

0 dB = 3.67 W/kg = 5.65 dBW/kg

ONETECH Corp.: 43-14, Jinsaegol-gil, Chowol-eup, Gwangju-si, Gyeonggi-do, 12735, Korea (TEL: 82-31-799-9500, FAX: 82-31-799-9599)

Impedance Measurement Plot for Body TSL

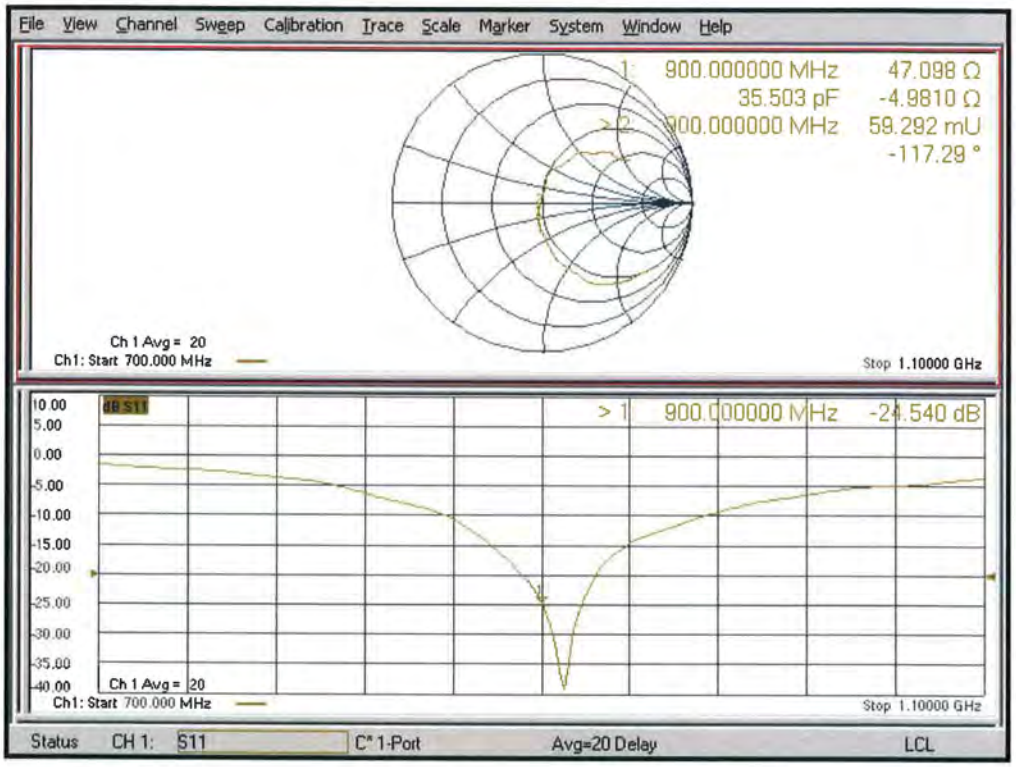

ONETECH Corp.: 43-14, Jinsaegol-gil, Chowol-eup, Gwangju-si, Gyeonggi-do, 12735, Korea (TEL: 82-31-799-9500, FAX: 82-31-799-9599)