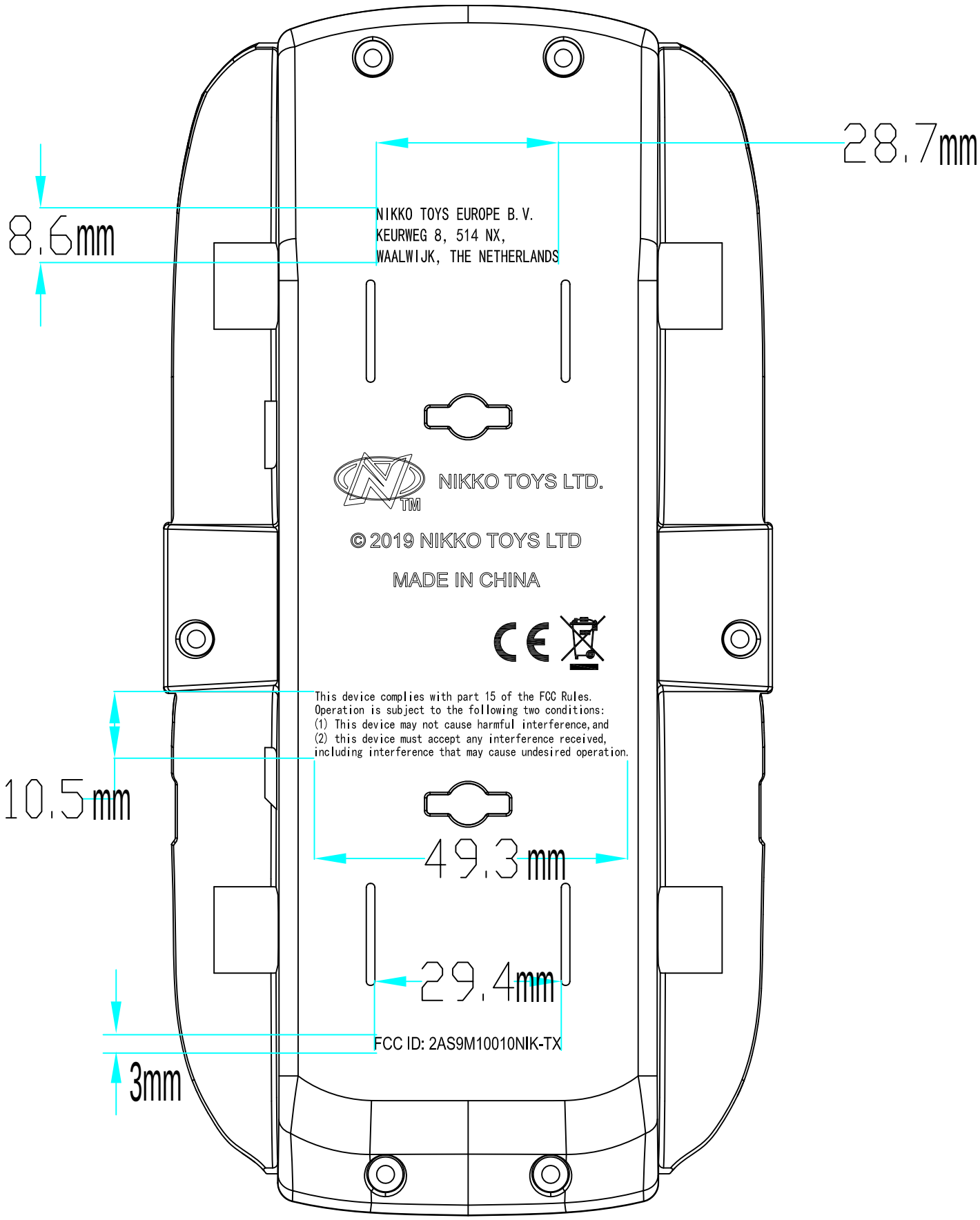
28.7mm
8.6mm
NIKKO TOYS EUROPE B.V.
KEURWEG 8, 514 NX,
WAALWIJK, THE NETHERLANDS
NIKKO TOYS LTD.
TM
© 2019 NIKKO TOYS LTD
MADE IN CHINA
This device complies with part 15 of the FCC Rules.
Operation is subject to the following two conditions:
(1) This device may not cause harmful interference, and
(2) this device must accept any interference received,
including interference that may cause undesired operation.
10.5mm
49.3mm
29.4mm
FCC ID: 2AS9M10010NIK-TX
3mm