MOTO BUDS 085_WT_packaging 2021/07/05_v4.0_Add NRCan logo

Dark blue color reference PMS2965C

Light blue color reference PMS7700C

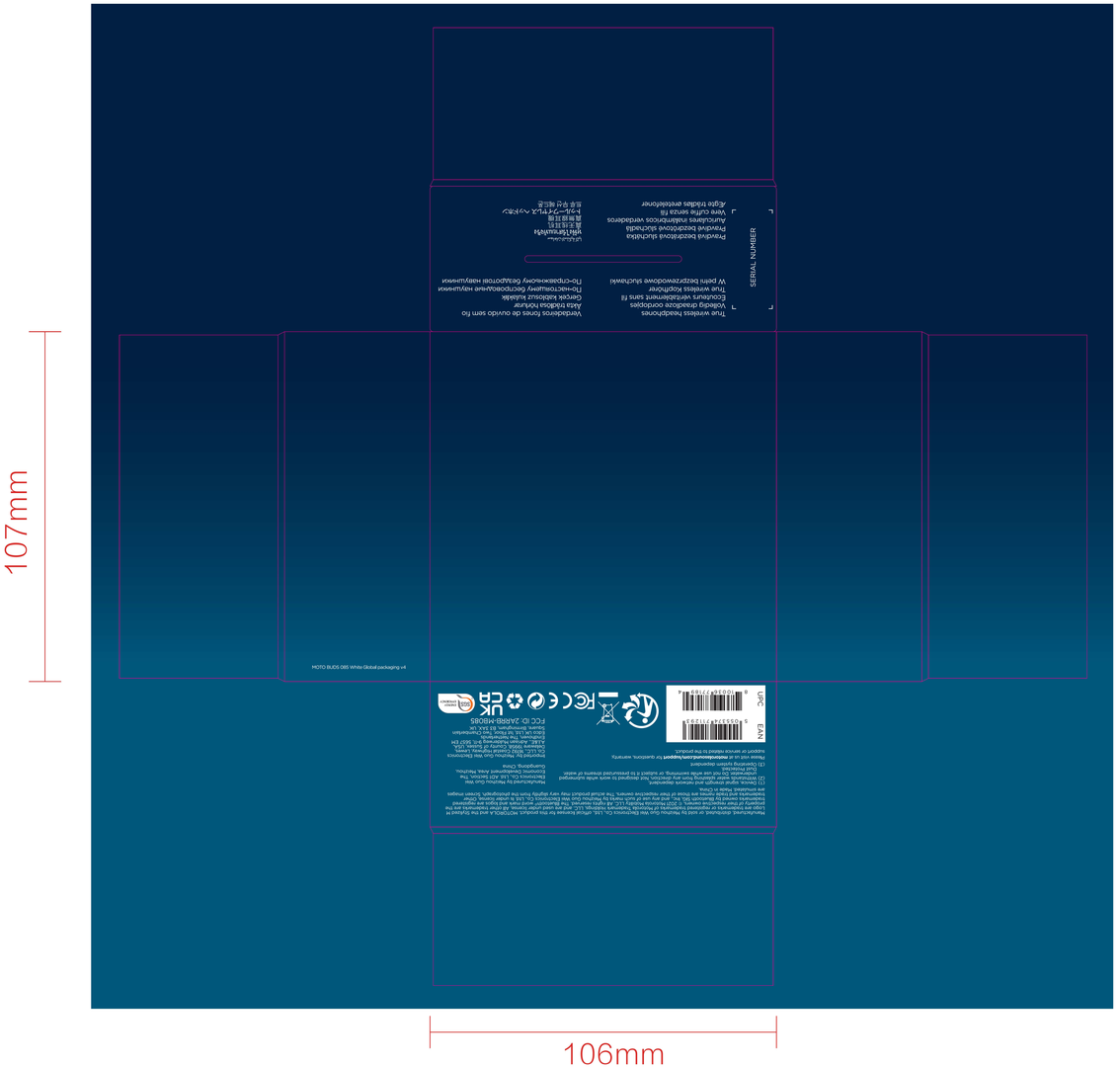

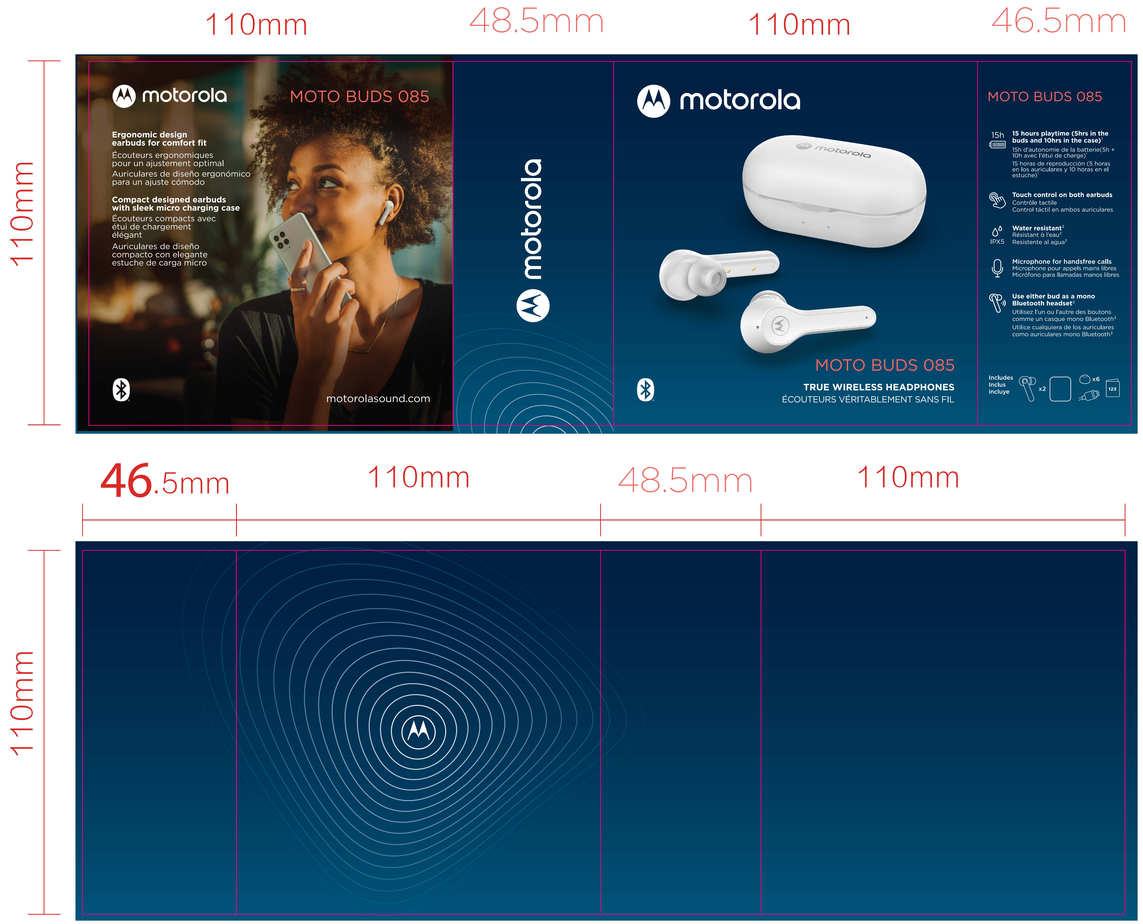

MOTO BUDS 085_WT_packaging 2021/07/05_v4.0_Add NRCan logo

Dark blue color reference PMS2965C

Light blue color reference PMS7700C

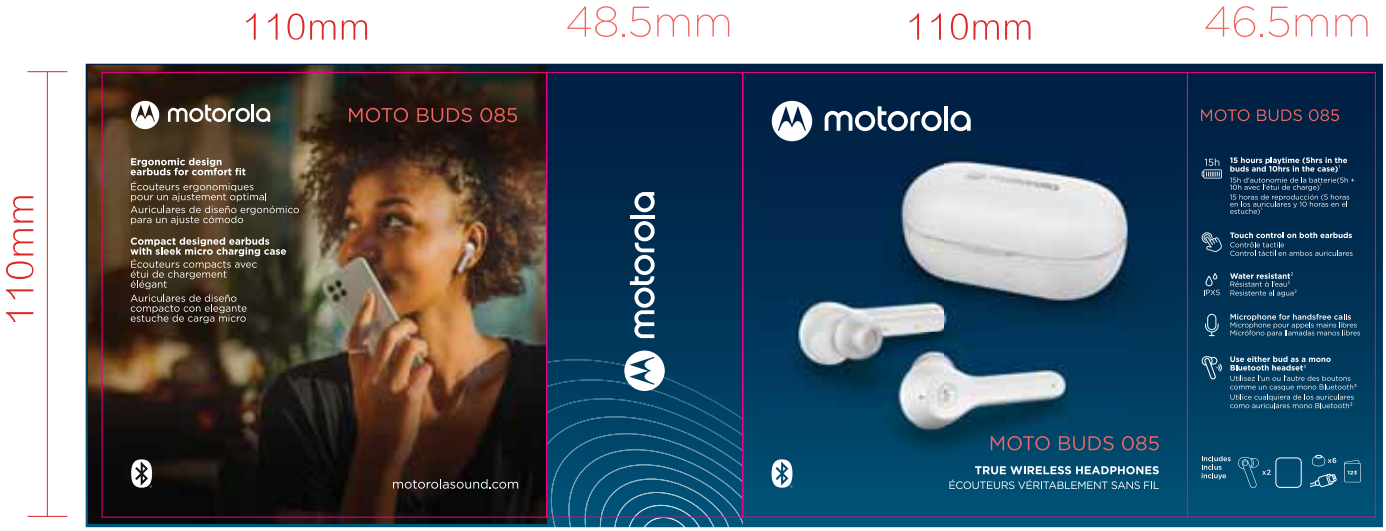

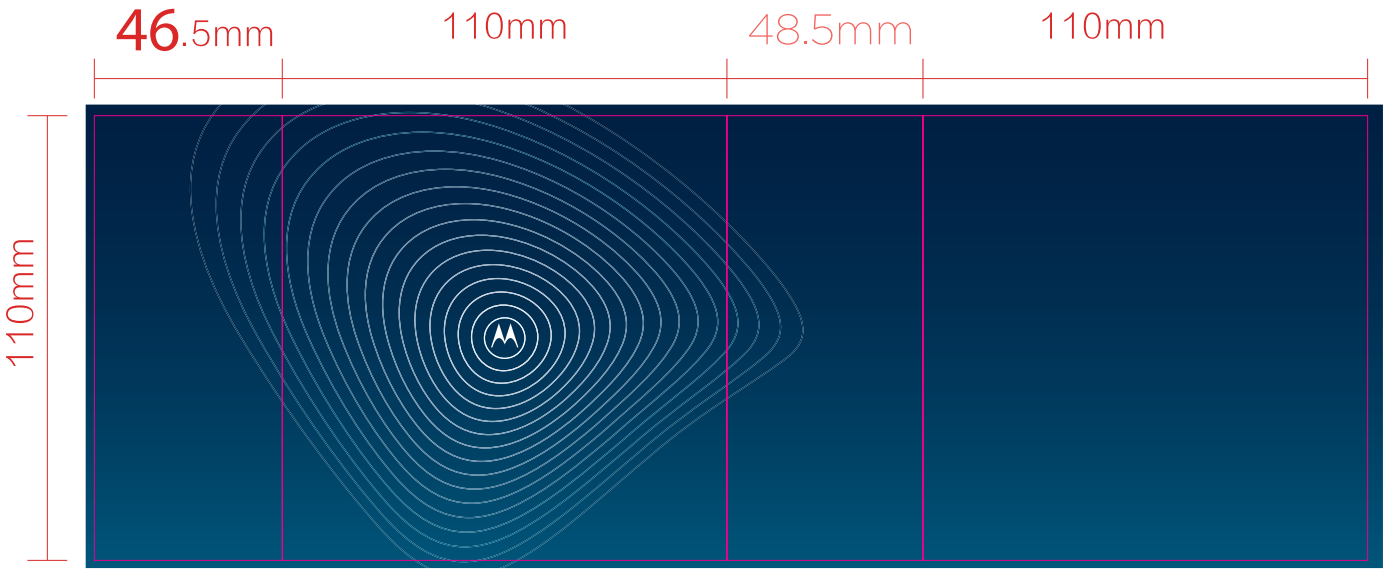

Inside outer box_PMS2965C

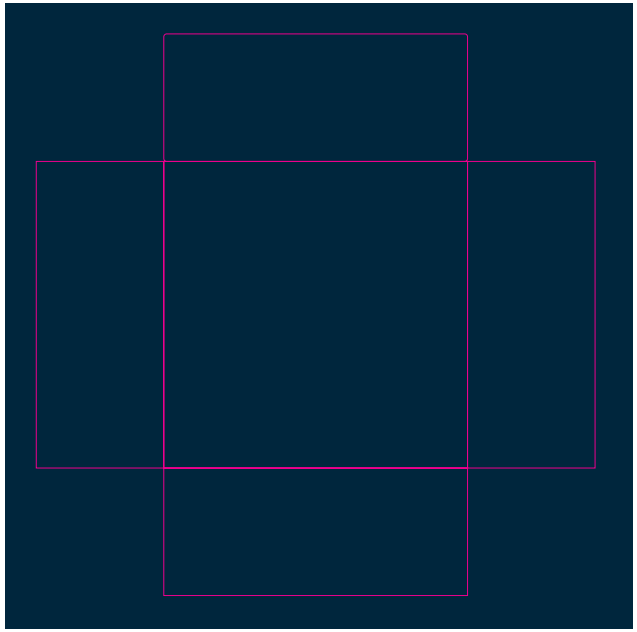

Inner paper tray_PMS2965C

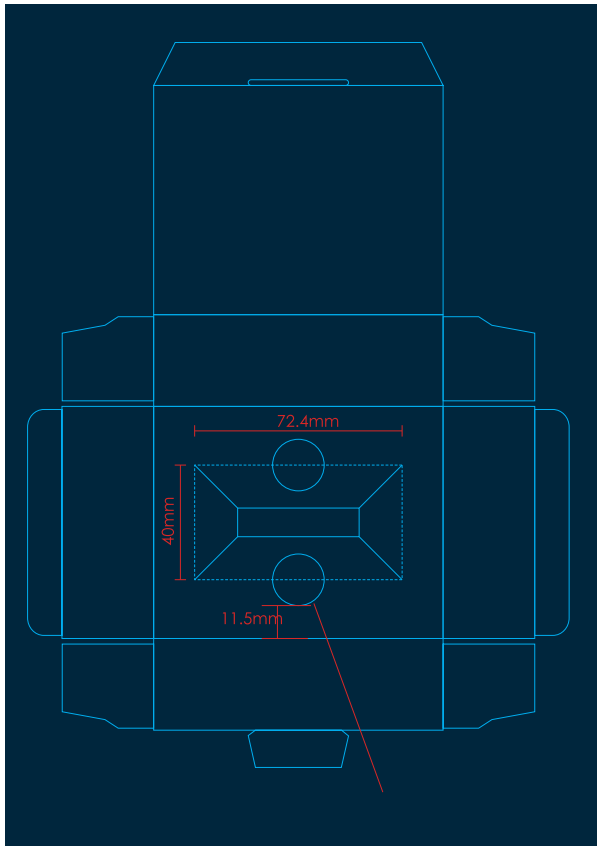
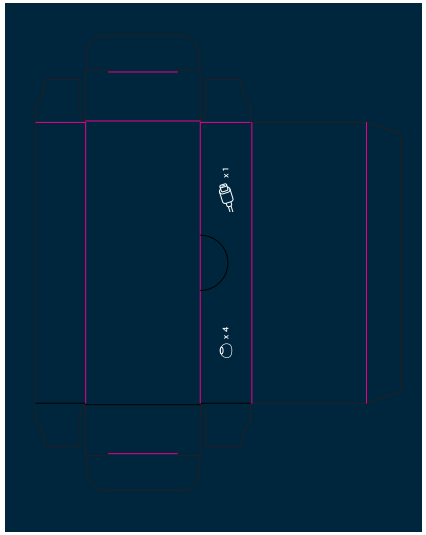
accessories box_PMS2965C