FCC ID: 2ARNF-M07331B

Mode:

Trade Name:

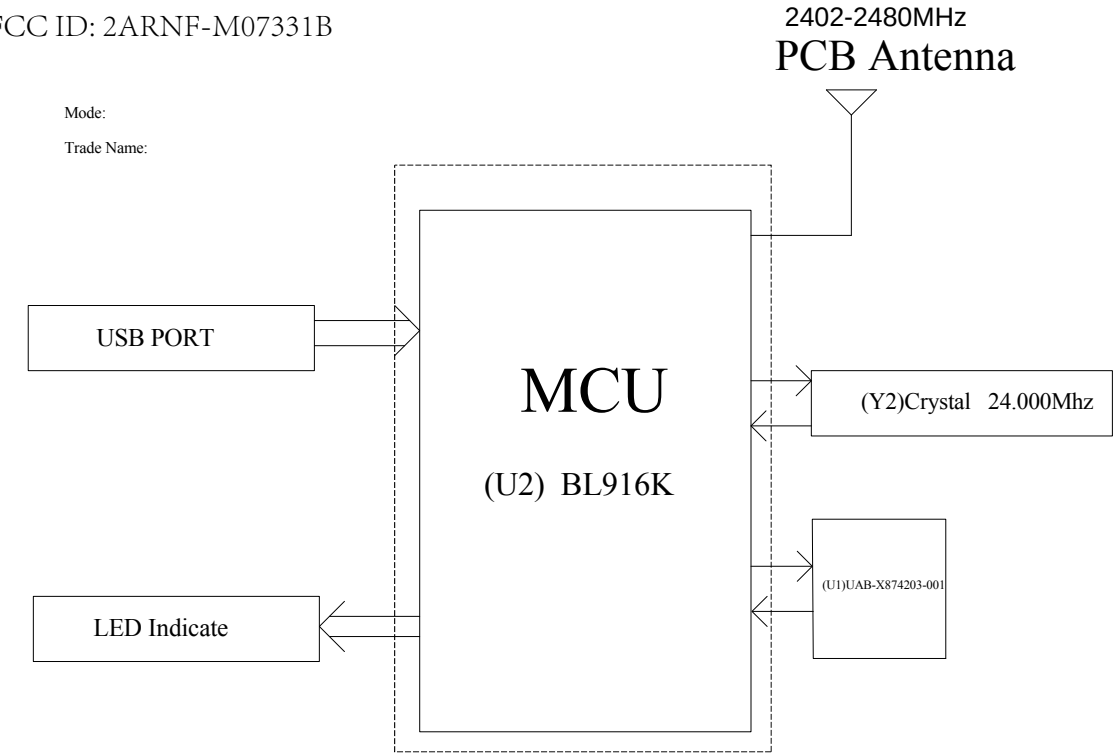

Title		
Size B	Number	Revision
Date: 15-Apr-2020		Sheet of
File:		Drawn by