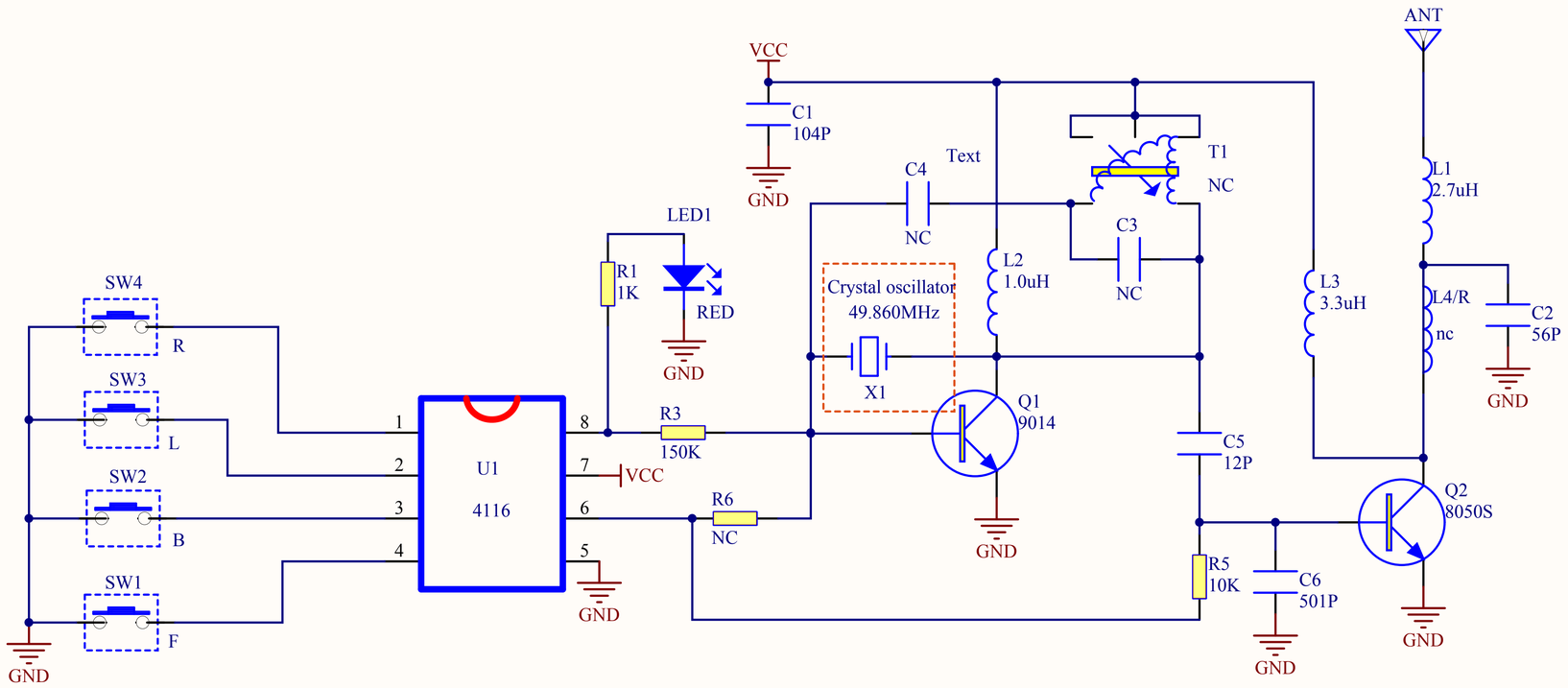

Title	8171T 49M	
Size A4	Number	Revision
Date: 2020/5/14		Sheet of
File: E:\2018 PCB \..\ 49M.SCHDOC		Drawn By: