ID Label info & Label Location

FCC ID: 2AR5FDONGLEBLE5

CALEX TECH Inc.
FCC ID: 2AR5FDONGLEBLE5
Model Name: DongleBLE5
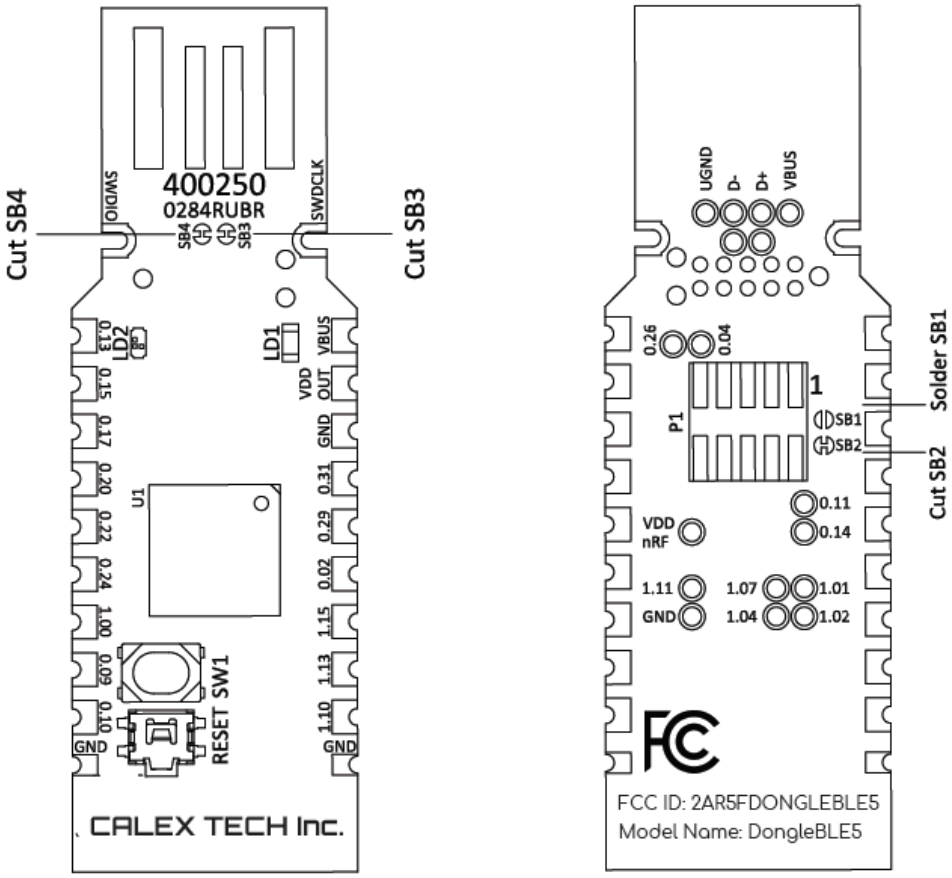
Label Location