1. Label

Name:Bluetooth Cooler Speaker
Model:MA107, MA107-MGV, MA107-LSK
Input: DC5V 1A
Speaker:4Ω 3W
Trade name:Sakar International, Inc

This device complies with part 15 of the FCC Rules.
Operation is subject to the following two conditions:
(1) This device may not cause harmful interference, and
(2) this device must accept any interference received,
including interference that may cause undesired operation.

FCC ID: 2AR37-MA107
MADE IN CHINA
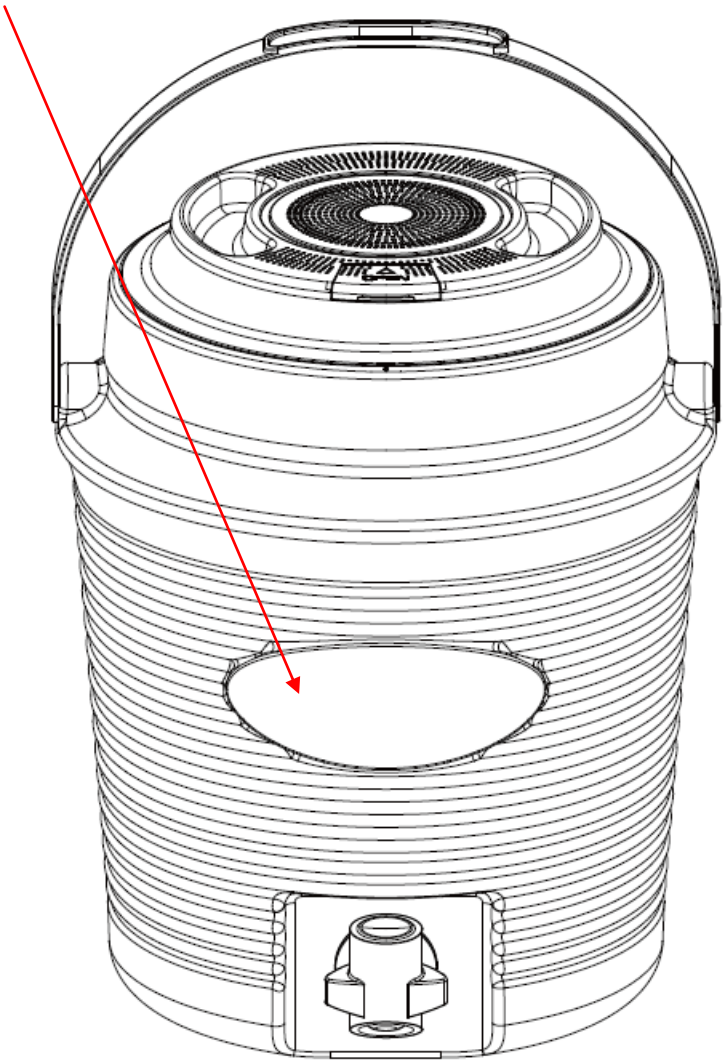
2. Label location