Contents

Safety and Warning ……4

1. About the camera……7

1.1 Main features……7

1.2 Computer system requirement……7

1.3 Camera's diagrams……8

1.4 Switch & Button function description……10

2. Start to use……11

2.1 Insert memory card……11

2.2 Insert batteries……11

2.3 Use external power supply……12

2.4 Connect to PC……13

2.5 Mount and fix the camera……14

3. Use the camera……15

3.1 Power on, Use and Power off the camera……15

3.2 Photo mode ……17

3.3 Video mode……17

4. Menu and Parameter Settings……18

4.1 Mode ……18

4.2 Image Size…… ……19

4.3 Sequence……19

4.4 Video Resolution……19

4.5 Video length…… ……20

4.6 Loop Storage…… ……20

4.7 PIR Interval……20

4.8 PIR Sensitivity……21

4.9 IR LED.....21

4.10 Side PIR 22

4.11 Monitoring Period.....22

4.12 Time Lapse 24

4.13 TL video resolution.....24

4.14 Language.....25

4.15 Date/ Time 25

4.16 Time Format.....26

4.17 Camera name.....26

4.18 Temperature 26

4.19 Beep sound 26

4.20 Record Audio 27

4.21 Date Stamp.....27

4.22 Password Setting.....27

4.23 WiFi SSID.....28

4.24 WiFi Password.....28

4.25 Auto WiFi Off.....29

4.26 Format 29

4.27 Default Setting.....30

4.28 Version.....30

4.29 MCUFW Update

5. Playback mode 30

5.1 View file 30

5.2 Delete Current.....31

5.3 Delete All 31

5.4 Protect files.....31

5.5 Unlock files…….....…….……..…31

6. WiFi connection and operation…….....……32

6.1 Install APP.....…….....…….……..32

6.2 Connect the camera…….....……..……..32

6.3 APP instructions.…….…….....……..…...35

7. Appendix …….....…….……..……..36

7.1 Technical specifications……....……..…….…..... ……..36

7.2 Common faults and troubleshooting……...……..38

FCC STATEMENT :

This device complies with Part 15 of the FCC Rules. Operation is subject to the following two conditions: (1) This device may not cause harmful interference, and (2) This device must accept any interference received, including interference that may cause undesired operation.

Warning: Changes or modifications not expressly approved by the party responsible for compliance could void the user's authority to operate the equipment. NOTE: This equipment has been tested and found to comply with the limits for a Class B digital device, pursuant to Part 15 of the FCC Rules. These limits are designed to provide reasonable protection against harmful interference in a residential installation. This equipment generates uses and can radiate radio frequency energy and, if not installed and used in accordance with the instructions, may cause harmful interference to radio communications. However, there is no guarantee that interference will not occur in a particular installation. If this equipment does cause harmful interference to radio or television reception, which can be determined by turning the equipment off and on, the user is encouraged to try to correct the interference by one or more of the following measures:

Reorient or relocate the receiving antenna.

Increase the separation between the equipment and receiver.

Connect the equipment into an outlet on a circuit different from that to which the receiver is connected.

Consult the dealer or an experienced radio/TV technician for help.

FCC Radiation Exposure Statement:

This equipment complies with FCC radiation exposure limits set forth for an uncontrolled environment. This equipment should be installed and operated with minimum distance 20cm between the radiator & your body.

Safety and Warning

Incorrect use may damage the camera or cause danger.

Before use, please read and observe the following safety and warning contents carefully.

Hazards to people who are incapable of using cameras

◇It is forbidden for children to use the camera alone, and can only be used by normal adults.

Electric shock and fire hazard

◇If the camera is damaged or foreign objects entered, please power off the camera immediately, otherwise there is a danger of fire or explosion.

◇Using an external power supply may cause electric shock or fire. Please keep the camera and power supply dry and ventilated, and do not cover with any objects.

◇Do not use external power supply during thunder or lightning, otherwise it may cause electric shock or other accidents.

Use safety warnings

◇It is forbidden to drop, hit, squeeze or puncture the camera.

◇It is forbidden to use corrosive chemicals to clean the camera.

◇It is forbidden to be close to high temperature or flammable materials.

◇It is forbidden to disassemble or repair the camera by yourself.

Use, Protection and Storage

◇The camera must be mounted in a firm place.

◇The camera has a rainproof function and can be used outdoors.

◇The camera cannot be submerged. It is forbidden to immerse the camera in water.

◇It is forbidden to use the camera upside down. Before it works, all toggle hasps must be fastened and the waterproof plug must be covered.

◇If the camera is not in use, the batteries must be taken out and placed in a dry place.

◇Man-made damages such as bumps and drops are not covered by the warranty.

Waste disposal

◇It is prohibited to dispose of the camera and its accessories as household waste. Discarding at will is prohibited.

◇ Please classify and handle it according to local laws and regulations.

Other warnings

◇ Please abide by local policies and regulations on the use of wireless products. Do not use the camera where it is prohibited to use.

◇ Please abide by the relevant local policies and regulations on personal privacy protection.

Check before use

To ensure your interests, please take a test shot to check before use.

We will not be liable for additional damages caused by improper use or malfunction of this camera.

About the manual

◇The manual is a general guide for the use of the Trail camera, and the pictures contained in it are for reference only.

◇We do our best to keep the content correct. If the manual does not match the camera due to update or software upgrade, please refer to the actual product without prior notice.

◇Due to the need to improve the user experience, the APP may be upgraded, adjusted or added with menus and functions. Please refer to the actual situation of the APP to operate and use, without prior notice.

Copyright and Trademark

We reserve the copyright and interpretation right of this manual. Any organization or individual may not reproduce and disseminate in any form without written consent.

Microsoft and **windows** are trademarks registered by Microsoft Corporation.

Pentium is a trademark registered by Intel Corporation.

Macintosh is a trademark registered by Apple Inc.

Other names or products referenced in this manual may be trademarks or registered trademarks of their respective owners.

1 About the camera

Thank you for purchasing this 4K HD camera! If you encounter problems in use, please contact us in time.

1.1 Main features

This is a 4K Ultra HD surveillance camera with with infrared night vision and rainproof function, which can work automatically outdoors all day along. It integrates Bluetooth and WiFi, and can be connected to a mobile phone for

remote operation through the APP.

When a person or animal enters the detection range, the camera automatically takes a photo or record a video. It is widely used in Captivating animal shots, Hunting, Security and other application scenarios.

It has the following features:

◆4K/30fps HD Video ◆H.264 ◆CMOS 4.0MP Image sensor ◆48.0MP Photo

◆0.3s Trigger ◆ IR Night vision ◆ Wide-angle lens ◆120° Detection angle

◆ Time-lapse ◆ All-weather work automatically ◆IP66

◆ Long standby ◆WiFi & Bluetooth ◆ Mobile APP operation

◆Support dual power supply (internal AA batteries, external power supply)

1.2 Computer system requirements

When using this camera with a computer connected, the computer must not be lower than the following specification:

- ◆ CORE i3/3.0GHz or above processor
- ◆ Windows XP or above operating system
- ◆ 8GB or more memory
- ◆ 2GB or more graphics card
- ◆ 500GB or more free disk space
- ◆ Standard USB2.0 or above interface
- ◆ 1920x1080 pixels or higher screen resolution.

If the computer specification is low, it may not work properly when connected to the camera.

1.3 Camera's diagrams

Front view **Back view**

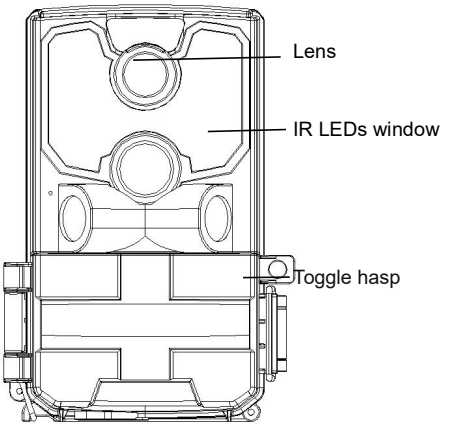

Left side view

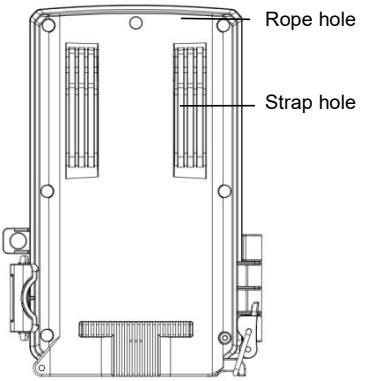

Bottom view

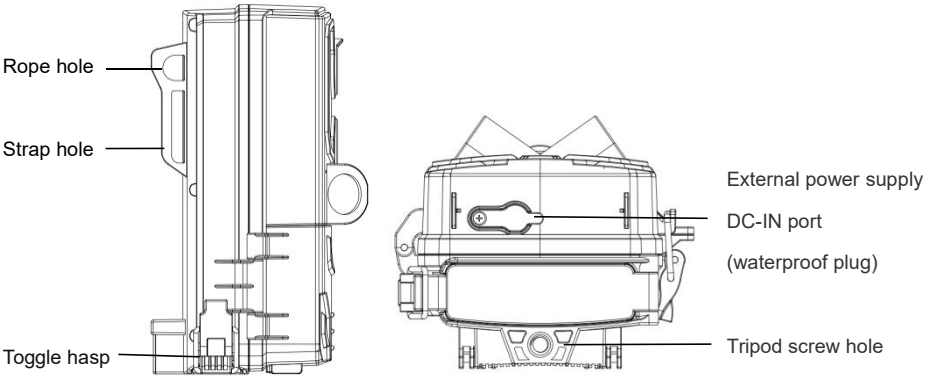

Front cover open view

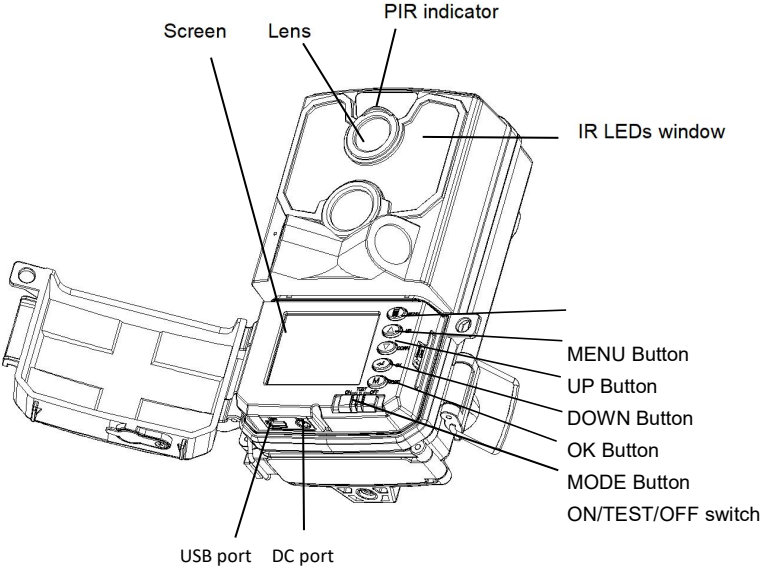

1.4 Switch & button function description

Icon	Switch or Button name	Functions
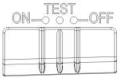	【ON/TEST/OFF】switch	OFF: Power off, the camera stops working. TEST: Users can set parameters, preview, test shot and playback photo and video. ON: Monitor shooting mode. At “ON”, the camera enters the automatic monitoring and shooting state.
	【MENU】	Enter the menu/return to the previous menu
	【MODE】	Change preview mode in order: Photo mode/ Video mode/ Playback mode
	【UP】	Move up /Page forward On the preview screen, short press to turn on or off WiFi
	【DOWN】	Move down/Page back
	【OK】	Confirm

Note: The uppercase words with brackets "【 】" represent the camera's buttons or switches, such as 【MENU】 represents the MENU button.

2 Start to use

2.1 Insert memory card, as shown below:

2.1.1 Before using the camera, the memory card must be inserted and formatted by the camera. (Item 4.24).

2.1.2 Unfasten the toggle hasp, open the front cover, insert the memory card (with the metal contact facing down), and push in until you hear a “click”.

2.1.3 After the memory card is correctly inserted, the icon of the memory card will be displayed in the upper right corner of the screen.

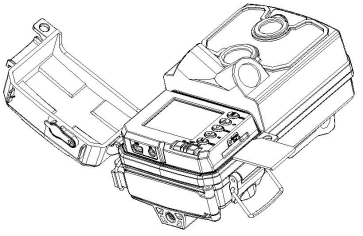

Insert the Memory card
in this direction

Notice:

Before removing or inserting the memory card, power off the camera, otherwise the memory card may be damaged or data may be lost.

Please use a qualified memory card of U3 or above, inferior memory cards will cause the camera to to fail to work.

2.2 Insert batteries

The camera is powered by 8 AA batteries, please insert the batteries as shown below:

2.2.1 Unfasten the battery compartment cover toggle hasp, open the cover, and insert the batteries according to the polarity marks shown on the battery compartment.

2.2.2 Keep the battery compartment cover clean, close the cover and fasten the toggle hasp.

2.2.3 Slide the【ON/TEST/OFF】switch to “TEST” and the screen will be on, which means the batteries are correctly inserted.

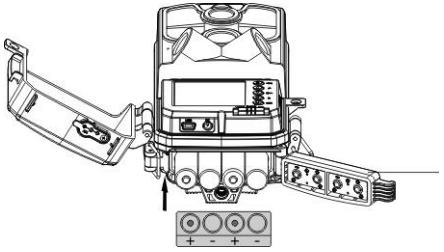

Open the battery compartment cover

Insert 8 AA batteries according to the polarity marks as shown

Notice:

Insert the batteries according to the polarity marks, incorrect insertion may damage the camera or cause danger. Do not mix old and new batteries.

After insetting the batteries, please fasten the toggle hasp. If the camera will not be used for a long time, please take out all batteries.

2.3 Use external power supply

To ensure long time operation, it is recommended to use an external power supply. Do not take out the batteries when using an external power supply.

External power supply specification: DC 6V/2.0A.

2.3.1 Slide 【ON/TEST/OFF】 switch to “TEST”, set parameters, slide 【ON/TEST/OFF】 switch to “ON” and close the front cover.

2.3.2 Open the waterproof plug of DC- IN port, insert the external power supply output into the DC- IN port.

2.3.3 Turn on the external power supply. When the camera detects the external power supply, it automatically switches to the external power supply

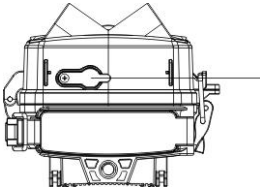

1. Open waterproof plug
2. Insert the external power supply output into the DC-IN port

Notice:

External power supply specification: DC 6V/2.0A, 3.5mm DC port.

The wrong external power supply will damage the camera. The camera can't work because of too low voltage or too low current.

Do not take out the internal batteries when using an external power supply.

When the external power supply is not used, the waterproof plug must be covered.

2.4 Connect to PC

The camera can be connected to a computer to transfer files and view photos or videos.

2.4.1 Slide the【ON/TEST/OFF】switch to “TEST”.

2.4.2 Connect the computer and the camera with a USB cable, as shown below.

2.4.3 When the camera displays "Connecting", it means the connection is successful. You can see "Removable Disk" in the computer. At this time, the camera can be used as a USB flash drive.

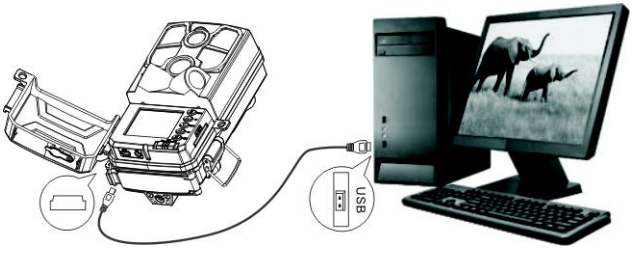

Connect the Camera USB port Connect the Computer USB

Notice:

Connect the USB cable to the camera first, and then to the computer. Please make sure that the cable is connected firmly , and slide【ON/TEST/OFF】switch to "ON".

2.5 Mount with a strap

The camera can work in rain, but not for diving. Please mount the camera in a firm place. Secure the camera with a strap or bracket. When mount the camera, the top of the camera is vertically upward. When it needs to be used close to the ground, the bottom of the camera should be more than 20cm away from the ground.

2.5.1 Use a strap to fix the camera

Use the strap to pass through the strap hole on the back of the camera, fix the strap to the tree trunk or other objects, adjust the shooting angle, and tighten the strap. As shown bellow:

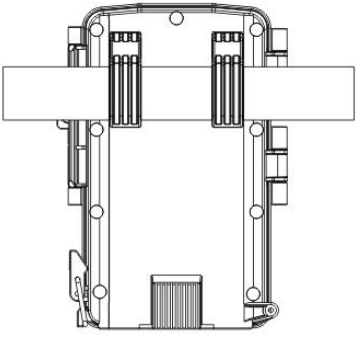

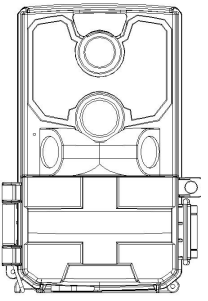

2.5.2 Fix with a bracket

Fix the round base of the bracket to the tree trunk or other fixed object with screws, screw the bracket screw into the tripod screw hole at the bottom of the camera, and tighten it clockwise. Adjust the camera angle and tighten all the screws. As shown below:

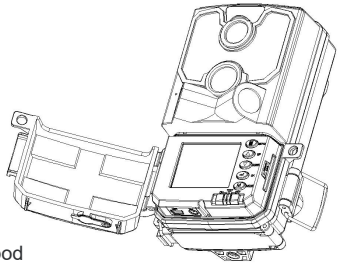

Screw the bracket screw into the tripod screw hole and tighten it clockwise

3 Use the camera

This Chapter will tell you how to shoot with the camera.

3.1 Power on, Test and Power off the camera

3.1.1 Power on

Slide the 【ON/TEST/OFF】switch to "TEST", the screen is on, which means the camera is powered on. Now , test shooting and playback can be performed, and camera parameters can also be set (see Chapter 4). If you are not familiar with the camera, it is recommended to use the default settings.

3.1.2 Change Preview mode

When the【ON/TEST/OFF】switch is at "TEST", you can change the preview mode.

1.When the【ON/TEST/OFF】switch is at "TEST", the default preview mode is **"Photo mode"**.

2. Press【MODE】to change **"Photo Mode" - "Video Mode" - "Playback Mode"** in turn.

In each mode, the corresponding icon displayed in the upper left corner of the screen: only " " means "Photo mode, only " " means Video mode.

Notice:

When the 【ON/TEST/OFF】switch is at "TEST", the mode change is only the preview mode change but not the camera's working mode change.

If you want to change the working mode of the camera, you must press the “MENU” button to enter the menu and choose the mode you need. (Refer to 4.1 Mode)

3.1.3 Test

To ensure the normal operation of the camera, please take a test shot before use.

1. Slide the【ON/TEST/OFF】switch to “TEST”, press【OK】to take a photo.
2. Press【MODE】to enter Video mode and press【OK】to record a video.
3. Press【MODE】to enter Playback mode, view the video and photo just shot to check whether the camera is working properly.

3.1.4 Monitor shooting

Set the camera parameters as needed, mount the camera in the shooting area, and make sure the lens is aimed at the shooting area.

Slide 【ON/TEST/OFF】 switch to “ON”, the PIR indicator flashes green, and the screen displays a 5-second countdown. After 5 seconds, the screen is off and the camera enters the monitoring shooting state. At this time, the camera automatically detects and shoots moving animals or people.

3.1.5 Power off

Before powering the camera off, you must slide【ON/TEST/OFF】switch to the "TEST". The screen will be on after about 5 seconds, then slide the【ON/TEST/OFF】switch to "OFF", the camera will power off. After powering off the camera, need to wait for 3 seconds before powering it on again.

Notice:

If slide 【ON/TEST/OFF】switch while the camera is working, the photo or video is shooting will be

automatically saved.

3.2 Photo mode

slide 【ON/TEST/OFF】switch to "TEST", the default preview mode is Photo mode, and the screen displays the following icons:

1.Photo mode	2.Photo resolution	3.Memory card	4.Number of shots remaining
5.Remaining battery capacity	6.Ambient temperature	7.Time	8.Date

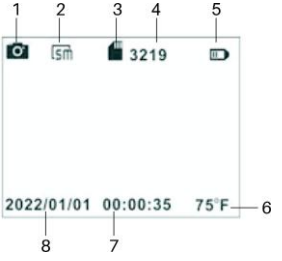

3.3 Video mode

Press【MODE】to change to the Video mode, and the screen displays the following icons:

1.Video mode	2.Video resolution	3.Memory card	4.Remaining video recording time
5.Remaining battery capacity	6.Ambient temperature	7.Time	8.Date

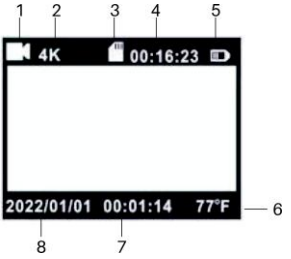

4 Menu and parameter settings

This Chapter helps you set camera parameters and use the advanced functions of the camera.

slide【ON/TEST/OFF】 switch to ”TEST”, keep the camera in photo mode or video mode, and all the settings in Chapter 4 must be done in this mode. The menu operations in photo mode or video mode are the same.

After the setting is completed, you must slide 【ON/TEST/OFF】switch to "ON", and the camera will work automatically according to the parameters you set.

4.1 Mode

Set which mode the camera uses to shoot when the camera is in the monitoring shooting state (【ON/TEST/OFF】switch is at "ON").

4.1.1 Press【MENU】to enter the menu for parameter settings.

4.1.2 Press【UP】or【DOWN】to choose "Mode", press【OK】to enter the options.

4.1.3 Press【UP】or【DOWN】to choose the one you want: Photo/Video/Photo+Video.

4.1.4 Press【OK】to confirm and return to the menu, press【MENU】again to exit the menu.

Notice:

Choose “Photo” mode: slide【ON/TEST/OFF】switch to "ON", the camera will only take photos.

Choose “Video” mode: slide【ON/TEST/OFF】switch to "ON", the camera will only record videos.

Choose “Photo+Video” mode: slide【ON/TEST/OFF】switch to "ON", the camera will take a photo first, and

then record a video.

4.2 Photo resolution

Set the resolution of photo. It is only applicable in photo mode, not in video mode.

4.2.1 Press【MENU】to enter the "Settings" menu.

4.2.2 Press【UP】or【DOWN】to choose "Photo resolution", press【OK】to enter options.

4.2.3 Press【UP】or【DOWN】to choose the one you want: 3MP/ 5MP/ 7MP/ 8MP/ 10MP/ 12MP/ 16MP/ 20MP/ 24MP/ 30MP/ 48MP.

4.2.4 Press【OK】to confirm, press【MENU】again to exit the setting menu.

4.3 Photo series

Set the number of photos that can be taken per shot. It is only applicable in photo mod.

4.3.1 Press【MENU】to enter the "Settings" menu.

4.3.2 Press【UP】or【DOWN】to choose "Photo Series", press【OK】to enter options.

4.3.3 Press【UP】or【DOWN】to choose the one you want:1/2/3 .

4.3.4 Press【OK】to confirm, press【MENU】again to exit the setting menu.

4.4 Video resolution

Set the resolution of video. The higher the resolution, the better the video quality and the more space it takes up. This function is only available in video mode.

4.4.1 Press【MENU】to enter the "Settings" menu.

4.4.2 Press【UP】or【DOWN】to choose "Video resolution", press【OK】to enter options.

4.4.3 Press【UP】or【DOWN】to choose the one you want:4K/ 2.7K/ 1080P(30FPS)/ 720P(30FPS)/ VGA;

4.4.4 Press【OK】to confirm, press【MENU】again to exit the setting menu.

4.5 Video length

Set the time length of the video. This function is only available in video mode.

4.5.1 Press【MENU】to enter the "Settings" menu.

4.5.2 Press【UP】or【DOWN】to choose "Video length", press【OK】to enter options.

4.5.3 Press【UP】or【DOWN】to choose the one you want:5 Sec/ 10 Sec/ 15 Sec/ 20 Sec/ 30 Sec/ 1 Min/ 2 Min/ 3 Min/ 5 Min.

4.5.4 Press【OK】to confirm, press【MENU】again to exit the setting menu.

4.6 Loop storage

Cyclic storage means that when the memory card is full, the camera will automatically overwrite the first shot and store the latest captured shot.

4.6.1 Press【MENU】to enter the "Settings" menu.

4.6.2 Press【UP】or【DOWN】to choose "Cycle storage", press【OK】to enter options.

4.6.3 Press【UP】or【DOWN】to choose: On/Off.

4.6.4 Press【OK】to confirm, press【MENU】again to exit the setting menu.

4.7 PIR interval

Set the time interval between two sensing of the camera. That is, after a shot, how long does it take to start the infrared motion detection again.

4.7.1 Press【MENU】to enter the "Settings" menu.

4.7.2 Press【UP】or【DOWN】to choose "PIR interval", press【OK】to enter options.

4.7.3 Press【UP】or【DOWN】to choose the one you want: 2 Sec/ 5 Sec/ 10 Sec/ 15 Sec/ 20 Sec/ 30 Sec/ 1 Min / 2 Min/ 3 Min/ 5 Min/ 10 Min/ 15 Min/ 30 Min/ 60 Min。

4.7.4 Press【OK】to confirm, press【MENU】again to exit the setting menu.

Notice:

The PIR interval has a significant impact on battery life. With shorter intervals, the camera is easier to capture, but more power-hungry.

4.8 PIR Sensitivity

Set the camera PIR sensitivity.

4.8.1 Press【MENU】to enter the menu;

4.8.2 Press【UP】or【DOWN】to choose “Sensitivity”, press【OK】to enter options;

4.8.3 Press【UP】or【DOWN】to choose the one you want: Low/Normal/High

4.8.4 Press【OK】to confirm and return, and press【MENU】to exit the menu.

Notice:

PIR sensitivity affects camera battery life. If you choose high sensitivity, the camera is easier to capture the objective, but it consumes more power.

4.9 IR brightness

Set the brightness of the infrared LEDs.

4.9.1 Press【MENU】to enter the menu;

4.9.2 Press【UP】or【DOWN】to choose “IR brightness”, press【OK】to enter the options;

4.9.3 Press【UP】or【DOWN】 to choose the the one you want: "High Light/Normal/Economical"

4.9.4 Press【OK】to confirm and return, and press【MENU】to exit the menu.

Notice:

The IR brightness affects the battery life and night vision of the camera.Choose “HighLight”, the night vision is clearer but it consumes more power.

4.10 Side PIR

The camera has three motion sensing windows, the one in the middle is the main sensing window, and the ones on left and right sides are side sensing windows.

This function can turn on or off the sensing windows on the left and right sides. When choosing "Off" side PIR, the camera detection angle will be smaller.

4.10.1 Press【MENU】to enter the menu.

4.10.2 Press【UP】or【DOWN】to choose “Side PIR”, press【OK】to enter options.

4.10.3 Press【UP】or【DOWN】to choose: Off/On.

4.10.4 Press【OK】to confirm and return, and press【MENU】to exit the menu.

Notice: Turning off the PIR on both sides can reduce the false triggering of the camera and save power, but the sensing (detection) angle of the camera will become smaller.

4.11 Monitoring Period

The camera allows the user to customize the camera to work only during the set time period. This function can be used in conjunction with Time-lapse, see Item 4.12.

Enter "Target recording time", set the monitoring start time and end time, close "Target recording time", the camera automatically monitors and shoots during the set time periods, and the camera does not work at other time.

Turn off "Target recording time", the camera will automatically monitor the shooting at any time.

A Set monitoring period

Set whether the monitoring period is enabled. Select ON to set the start and end time of period 1

4.11.1 Press【MENU】to enter the menu.

4.11.2 Press【UP】or【DOWN】to choose “Monitoring period”, press【OK】to enter the options.

4.11.3 Press 【UP】 or 【DOWN】 to choose: Off/ On. Choose "On".

4.11.4 Press 【OK】to confirm and return, and then press【MENU】to exit the menu.

B Timer 1 Start

4.1.1.5 Press【MENU】to enter the menu .

4.11.6 Press【UP】or【DOWN】to choose "Timer 1 Start", and press【OK】to enter the options.

4.11.7 The cursor stays on the "Hour" option of the start time. Press 【UP】 or 【DOWN】 to adjust start time- add or reduce the " hour", press 【OK】, the cursor stops at the "Minute" option, and press 【UP】 or 【DOWN】to add or reduce the "minute".

4.11.8 Press【OK】to confirm and return, and then press【MENU】to exit the menu.

C Timer 1 Stop

4.1.1.9 Press【MENU】to enter the menu .

4.11.10 The cursor stays on the "Hour" option of the end time. Press 【UP】 or 【DOWN】 to adjust end time- add or reduce the " hour", press 【OK】, the cursor stops at the "Minute" option, and press 【UP】 or 【DOWN】to add or reduce the "minute".

4.11.11 Press【OK】to confirm and return, and then press【MENU】to exit the menu.

Notice:

1. If the monitoring period is set, the camera will not shoot outside the set period.
2. The start time of the "Monitoring Period" must be later than the camera system time. Otherwise, the set time period will take effect the next day.

4.12 Time-lapse

The camera supports time-lapse. Time-lapse photography is a technique in which the frequency at which film frames are captured (the frame rate) is much lower than the frequency used to view the sequence. It is often used to photograph a subject that changes imperceptibly slowly, and the effect creates a smooth impression of motion, such as a flower opening.

This function can turn on or off "Time-Lapse", and set the interval of time-lapse photography, that is, how often to

take a photo.

Turn off "Target recording time 1 or 2", and turn on "Time-Lapse", the camera will take photos regularly and synthesize a video.

Turn on "Target recording time 1 or 2", turn on "Time-Lapse", within the set periods, the camera will take photos and synthesize a video. The camera will not work outside the set periods.

4.12.1 Press【MENU】to enter the menu .

4.12.2 Press【UP】or【DOWN】to choose “Time-Lapse”, press【OK】to enter the options.

choose "Off" to disable time-lapse photography.

Press 【UP】 or 【DOWN】 to choose a time interval to enable “Time-Lapse”, and the camera will take photos at the chosen time interval.

4.12.3 Press【OK】to confirm and return, and press【MENU】to exit the menu.

Notice:

"Time-lapse" can be used with "Target recording time 1 or 2". The camera will take photos within the set time periods. The camera does not take photos outside the set time periods.

4.13 Language

Set the display and operation language of the camera, please choose according to your needs.

4.13.1 Press【MENU】to enter the menu;

4.13.2 Press【UP】or【DOWN】to choose “Language”, press【OK】to enter options;

4.13.3 Press【UP】or【DOWN】to choose the language you needed.

4.13.4 Press【OK】to confirm and return, and press【MENU】to exit the menu.

4.14 System time

Set the system time and date.

4.14.1 Press【MENU】to enter the menu.

4.14.2 Press【UP】or【DOWN】to choose "System Time", and press【OK】to enter the options.

4.14.3 "DateTime" is displayed in the upper left corner of the screen. Press 【UP】 or 【DOWN】 to add or reduce the year, press 【OK】 to confirm and move to **"Month"** setting, press 【UP】 or 【DOWN】 to add or reduce the month, press 【OK】 to confirm and move to **"Date"** setting, press 【UP】 or 【DOWN】to add or reduce the date, press 【OK】to confirm and move to **"Hour"** setting, press 【UP】or【DOWN】 to add or reduce the hour, press 【OK】 to confirm and move to **"Minute"** setting, press 【UP】 or 【DOWN】 to add or reduce the minute, press 【OK】 to confirm and return to the menu automatically.

4.14.4 After completing the setting, press【MENU】to exit the menu.

4.15 Serial NO.

In order to distinguish it from other cameras, a unique serial number can be set for each camera, the serial number has 6 digits, each of which can be a letter or a number.

4.15.1 Press【MENU】to enter the menu.

4.15.2 Press【UP】or【DOWN】to choose "Serial No.", press【OK】to enter, press【UP】or【DOWN】to choose "On", and press【OK】to enter the setting.

4.15.3 Press 【UP】 or【DOWN】 to add or reduce the first digit, press 【OK】 to move to the next digit, and press 【UP】or【DOWN】to add or reduce the second digit. Repeat the above steps until you finish setting 6 digits.

4.15.4 Press【OK】to confirm and return, and press【MENU】to exit the menu.

4.16 Temperature unit

Sets the temperature unit displayed and recorded by the camera. "F" means Fahrenheit and "C" means Celsius.

4.16.1 Press【MENU】to enter the menu;

4.16.2 Press【UP】or【DOWN】to choose “Temp Unit”, press【OK】to enter options;

4.16.3 Press【UP】or【DOWN】to choose the unit: Celsius/Fahrenheit;

4.16.4 Press【OK】to confirm and return, and press【MENU】to exit the menu.

4.17 Button tone

Set to enable or disable the camera button tone.

4.17.1 Press【MENU】to enter the menu;

4.17.2 Press【UP】or【DOWN】, choose “Beep Sound”, press【OK】to enter the options;

4.17.3 Press【UP】or【DOWN】to choose: Off/On

4.17.4 Press【OK】to confirm and return, and press【MENU】to exit the menu.

4.18 Audio recording

Set the camera's built-in microphone on or off. Choose “On” to record sound when recording video.

4.18.1 Press【MENU】to enter the menu;

4.18.2 Press【UP】or【DOWN】to choose “Audio recording”, press【OK】to enter the options;

4.18.3 Press【UP】or【DOWN】to choose audio recording: Off/On

4.18.4 Press【OK】to confirm and return, and press【MENU】to exit the menu.

4.19 Stamp

Set whether to display stamp information on photo and video files. choose Date & Time, the photo will display the date and time stamp; choose Date, the photo will only display the date stamp; choose Off to not display the stamp.

4.19.1 Press【MENU】to enter the menu;

4.19.2 Press【UP】or【DOWN】to choose “Stamp”, press【OK】to enter options;

4.19.3 Press【UP】or【DOWN】to choose: Off/Date/Date&Time;

4.19.4 Press【OK】to confirm and return, and press【MENU】to exit the menu.

4.20 Password protection (WiFi models only)

Set the power-on password of the camera to protect your privacy. After you set a password, you will need to enter

your password every time you turn on the phone.

4.20.1 Press【MENU】to enter the menu;

4.20.2 Press【UP】or【DOWN】to choose “Password Protection”, press【OK】to enter the options;

4.20.3 Press【UP】or【DOWN】to choose the power-on password: Off/On, choose “Off” to not set a power-on password; choose “On” and press【OK】to set the password. The screen displays 4 digits: “0000”. It starts from the first digit. If you press【UP】, it will go from natural numbers 1 to 9, and then continue from English capital letter A to Z. If you press【DOWN】, it will go from English capital letter Z to A, and then continue from natural numbers 9 to 1. Press【OK】 to confirm and move to the next digit, and repeat this until four digits are set.

4.20.4Press【OK】to confirm and return, and press【MENU】to exit the menu.

Notice:

Please remember the password you set by yourself.

If you forget the set power-on password, please enter the super password "1111" to enter.

4.21 WiFi SSID (WiFi models only)

This function is used to change the WiFi name of the camera. The first 6 digits of the WiFi name can be changed, and the last 11 digits are fixed and cannot be changed.

4.21.1 Press 【MENU】 to enter the menu ;

4.21.2 Press 【UP】or【DOWN】 to choose "WiFi SSID", and press 【OK】 to enter the "WiFi SSID" setting;

4.21.3 The screen displays the first 6 English capital letters: **“CAMERA”**, it starts from the first letter. The change is similar to above item **4.20 Password protection**, press 【UP】 or 【DOWN】to choose the English capital letter or natural number you want, press【OK】 to confirm and move to the next letter, repeat this until 6 letters are changed.

4.21.4 Press【OK】 to confirm and return, press【MENU】to exit the menu.

4.22 WiFi password (WiFi models only)

This function is used to change the WiFi password of the camera

4.22.1 Press MENU】 to enter the menu;

4.22.2 Press 【UP】 or 【DOWN】, choose “WiFi Password”, press 【OK】 to enter “WiFi Password” change;

4.22.3 The screen displays 8 digits: **“12345678”** , The change is similar to above item **4.21 WiFi SSID,** press 【UP】 or 【DOWN】to choose the natural number or English capital letter you want, press【OK】 to confirm and move to the next digit, and repeat this until eight digits are changed.

4.22.4 Press【OK】 to confirm and return, press【MENU】 to exit the menu.

4.23 Auto WiFi off (WiFi models only)

This function is used to set the time to automatically turn off WiFi when the WiFi is turned on but the WiFi is not connected to the phone.

Set the time for the camera's WiFi to be automatically turned off. To save power, if the camera’s WiFi is not connected to the mobile phone, the camera will automatically turn off WiFi after a period of time.

4.23.1 Press 【MENU】 to enter the menu;

4.23.2 Press 【UP】or 【DOWN】, choose "Auto WiFi Off", and press 【OK】 to enter the option;

4.23.3 Press 【UP】or【DOWN】 to choose the waiting time of WiFi auto-off: 1 Min/2 Min/3 Min

4.23.4 Press the【OK】 to confirm and return, press【MENU】 to exit the menu.

4.24 Format Memory card

Use the format function to format the memory card.

4.24.1 Press【MENU】to enter the menu;

4.24.2 Press【UP】or【DOWN】to choose “Format Memory Card”, press【OK】to enter options;

4.24.3 Press【UP】or【DOWN】to choose : Yes/No, press 【OK】to confirm;

Choose "No" to not execute formatting, and it will automatically return.

Choose "Yes" to execute formatting, please wait for the formatting to complete.

4.24.4 After the formatting is completed, press 【MENU】to exit the main menu.

Notice:

Please use the “Format memory card ” function with caution. Formatting deletes all files and there is no way to recover them.

While formatting is in progress, any other operation is forbidden and please ensure that the camera is powered on at all times.

4.25 Reset Settings

Restore the camera to factory settings. If the camera function is messed up due to the wrong settings, you can use this function to reset the camera. This function will not delete the files on the memory card.

4.25.1 Press【MENU】to enter the menu;

4.25.2 Press【UP】or【DOWN】to choose “Reset Settings”, press【OK】to enter options;

4.25.3 Press【UP】or【DOWN】to choose: Yes/No; Choose "Yes", press 【OK】 to execute the operation, and wait for the camera to reset.

4.25.4 After the operation is completed,the camera will restore the factory settings, press 【MENU】to exit the main menu.

4.26 System

View the camera's current firmware version number and upgrade the firmware.

4.26.1 Press【MENU】to enter the menu;

4.26.2 Press【UP】or【DOWN】to choose “System”, press【OK】to enter options;

4.26.3 Press 【UP】 or 【DOWN】 to choose "FW Version", press 【OK】, the screen will display the current firmware version number, press 【MENU】 to exit.

4.26.4 Firmware upgrade. Copy the executable upgrade file to the root directory of the SD card and load it into the camera. Press 【UP】 or 【DOWN】 to choose "FW Update", press 【OK】 to automatically upgrade the system software, please wait for the upgrade to complete.

4.26.5 After the upgrade is complete, it will return automatically.

Notice:

During the upgrade, please ensure that the camera is always powered on and do not perform any operations. Otherwise, the camera may freeze and cannot be recovered!

5 Playback Mode Operation

The files shot by the camera can be played back on the screen. You can also do Protect files, Unprotect files, Delete files, and other operations.

Slide 【ON/TEST/OFF】switch to "TEST", press【MODE】twice to enter playback mode and keep it in this mode.

5.1 View files

5.1.1 In playback mode, the screen displays the files in the memory card. The icon in the upper left corner of the screen represents the file type, " " means photos, and " " means videos.

5.1.2 Press【UP】or【DOWN】to display files forward and backward.

5.1.3 For video files, press【OK】to play, press 【OK】 again to pause playback; press【MENU】to stop video playback.

5.1.4 Press【MODE】to exit playback mode.

5.2 Delete a single file

In playback mode, delete a file.

5.2.1 Press【UP】or【DOWN】to choose the file to be deleted, and press【MENU】to enter the menu.

5.2.2 Press【UP】or【DOWN】to choose "Delete Single", press【OK】to enter options: "Yes/No".

5.2.3 Press【UP】or【DOWN】to choose, choose "No" to not delete the file; choose "Yes" and press【OK】to delete the chosen file.

5.3 Delete all files

In playback mode, delete all photos and videos.

5.3.1 Press【MENU】to enter the menu.

5.3.2 Press【UP】or【DOWN】to choose “Delete all”, press【OK】to enter options: “Yes/No‘.

5.3.3 Press 【UP】or【DOWN】to choose, choose “No” not to delete the file; choose “Yes” and press 【OK】 to confirm to delete all files.

Notice: Files cannot be recovered after deletion so please use the delete function with caution.

5.4 Protect files

Lock one or all files to protect those photos or videos from accidental deletion.

5.4.1 Press【UP】or【DOWN】to choose the file to be protected.

5.4.2 Press【MENU】to enter the menu, press【Up】 or【DOWN】to choose "Protect", and press【OK】to enter the options.

5.4.3 Press【UP】or【DOWN】to choose: Protect Single/ Protect All. Choose "Protect Single" to protect the current file; Choose "Protect All" to protect all files.

5.4.4 Press【OK】to enter the options, press【UP】or【DOWN】to choose: Yes/No, choose "Yes", and press【OK】to execute the operation.

5.4.5 Press【MENU】to return.

Notice:

If a file is protected, the icon “ “ is displayed in the upper left corner of the screen. After the file protection is released, the “ “ icon disappears.

Delete operations do not delete protected files. Format operation will delete protected files.

5.5 Unprotect files

Release file protection. If you want to delete one or more protected files, you need to unprotect them first, and then you can delete these files.

5.5.1 Press【UP】or【DOWN】to choose a protected photo or video.

5.5.2 Press【MENU】to enter the menu, press【UP】or【DOW】 to choose the "Protect" menu, press 【UP】or【DOWN】to choose: Unprotect Single/Unprotect All.

5.5.3 Press【OK】to enter options: Yes/No, choose "Yes", and press【OK】to execute the operation.

5.5.4 Press【MENU】to return.

6. WiFi connection and operation

You can use your mobile phone to connect to the camera's WiFi, and remotely operate the camera to set parameters, preview and download files through the APP.

6.1. Install APP

6.1.1 Install the APP for Android devices, search for "Trail Hunter" in "Google Play" or scan the QR code below to download "Ultra WiFiCam" and follow the prompts to complete the installation.

QR code to be added

6.1.2 Install the APP for iOS devices, search for "Trail Hunter" in "APP store" or scan the QR code below to download "Ultra WiFiCam", and follow the prompts to complete the installation.

QR code to be added

6.2 Connect the camera (WiFi models only)

Keep the camera 【ON/TEST/OFF】 switch at "TEST" or "ON", and open the APP "Trail Hunter" installed on your mobile phone.

6.2.1 Click "Connect Device" and wait for the APP to search for Bluetooth device.

6.2.2 The APP displays the “Bluetooth List”, choose and click "TrailCam_XXXX", then enter the camera WiFi password, the default password is: 12345678, click “Agree” to connect the camera.

6.2.3 After the connection is successful, the phone will display the camera preview screen, and you can operate the camera in the APP.

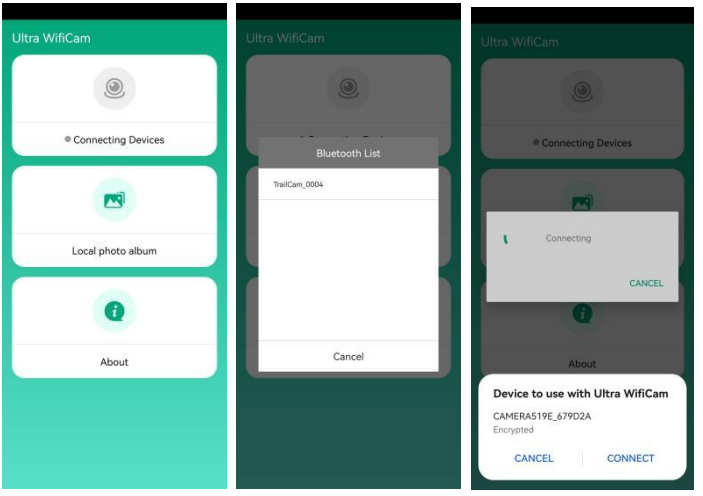

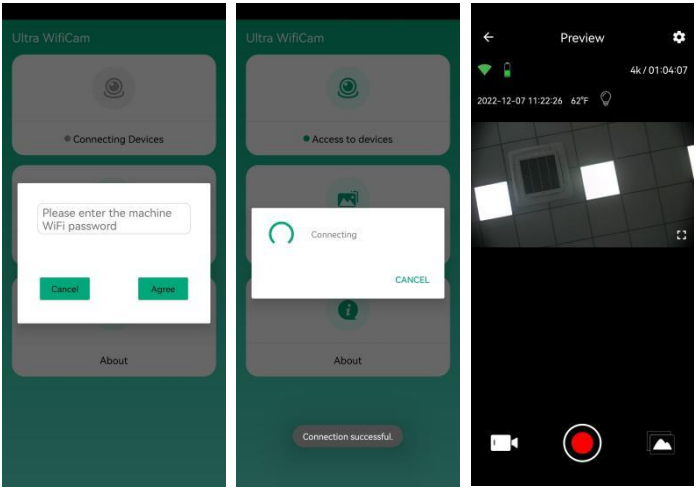

6.3 APP Instructions

6.3.1 Change mode

Click the icon to enable/disable the night vision function.

Click the icon to change to video mode.

Click the icon to change to photo mode.

6.3.2 View photos and videos

Click the icon to view photos and videos. You can also download and delete photo and video files according to the APP's prompts.

6.3.3 Set camera parameters

Click the icon to set camera parameters and functions in the APP. Please refer to the prompt information to operate.

6.3.4 Shooting

Click the icon to shoot a video. Click the icon to take a photo.

6.3.5 Exit the APP

Click the icon in the upper left corner of the screen, the screen prompts "Confirm Is the camera turn off?", Click ‘”Confirm”, exit the APP, and disconnect.

Notice: Using WiFi to connect the camera consumes a lot of power, and it is not recommended to use this function for a long time.

7 Appendix

7.1 Technical Specifications

Image sensor	CMOS sensor 4.0 MP, 48MP (interpolation)
Lens	F/1.6, f=4mm, FOV:90°
Memory	Support SD card, U3 or above, up to 128GB
Trigger speed	0.3s
IR LEDs	850nm/36pcs
PIR sensitivity	High/ Medium/ Low
Detection distance	0 ~ 20m
Detection angle	120°
PIR interval	2sec ~ 59min59sec
Screen	2.0” color IPS high-definition screen
Working mode	Photo mode/Video mode/Photo+Video mode/Time-lapse
Photo	JPEG, 3MP/5MP/8MP/10MP/12MP/16MP/20MP/24M/30M/48M
Video	MP4, 4K/30fps, 2.7K/30fps, 1080P/30fps, 720P/30fps , VGA/30fps
Video length	5sec ~ 5min

Microphone	Yes, built-in
Speaker	Yes, built-in
Temperature detection	Yes
Operating voltage	DC 6V
WiFi	Yes, Support interconnection with mobile phones, APP: Ultra WiFiCam
Bluebooth	Yes, mobile phone Bluetooth remote control
Battery	8 AA batteries (not included)
External power supply	DC 6V/2.0A (not included)
Standby time	about 6 months
Language	English/German/Swedish/Spanish/French/Italian/Portuguese/Traditional Chinese/Simplified Chinese/Polish/Japanese/Dutch
Waterproof rating	IP66
Dimensions	146(L)* 101(W)*86(H) mm
Weight	Appr. 286±5g (without batteries)

7.2 Common faults and troubleshooting

Problems	**Possible reasons**	**Solutions**
Camera won't power on	Low battery or wrong batteries	Replace with correct batteries
	Batteries are inserted incorrectly	Insert the batteries correctly
	There are foreign objects on the contacts of the battery compartment cover	Check the battery compartment cover and clean up foreign objects if any
	External power supply of wrong specification or connection error	Use a suitable external power supply and connect it correctly
Camera shuts	Low battery	Replace with new batteries or use an external

down suddenly		power supply
Normal during the day, photos taken are dark at night	Low battery or wrong external power supply	Replace with new batteries or an external power supply that meets requirements
Does not read Memory card or save files	Power outage before file storage	Replace with new batteries or an external power supply that meets requirements.
	Memory card write speed is too slow	Replace with a U3 or above memory card
	Memory card is damaged or does not meet specifications	Replace with a memory card that meets the specifications and format it with the camera
Camera freezes while working	Low battery or wrong external power supply	Replace with new batteries or an external power supply that meets requirements
	Damaged or poor quality memory card	Replace with a qualified memory card and format it with the camera, reset and restart the camera
All buttons do not work	Short circuit when camera is connected to other device	Restart the camera, connect correctly.
	A button is stuck	Press and check each button, restart the camera.
	Poor quality Memory card	Remove the Memory card, restart the camera.
Camera consumes a lot of power	Camera settings, PIR interval is too short	Choose a longer PIR interval.
	Camera settings, PIR sensitivity is too high	Choose a lower PIR sensitivity.
	Camera settings, IR brightness is too high	Choose a lower IR brightness.

	Camera settings, video length is too long	Choose a shorter video length (like 5 seconds).
	Camera settings, take a lot photos	Set a smaller number of photos (such as 1).
	too many shots at night	If shoot a lot at night, it is recommended to use an external power supply
	The above settings are the balance between camera performance and battery life. Please refer to the manual for proper settings to get a better effect and battery life.	
Water has gotten into the camera or the lens is foggy	The waterproof ring has fallen off or there is a foreign object	Check the waterproof rings, keep the waterproof rings clean, and make sure the waterproof rings are placed correctly
	The toggle hasps are not fastened or waterproof plug is not tightly covered.	Before using the camera, please check and fasten all toggle buckles and cover the waterproof plug
	Improper use, such as putting the camera in water	The camera is rainproof, but it is forbidden to put it in water
	Mounting or using the camera incorrectly, such as upside down	To mount the camera correctly, the top of the camera must face up and the camera must be mounted vertically
	If the camera lens is foggy, or water gets into the camera but it works, power it off and take out the batteries immediately. Wipe off any water or mist with a dry towel, then open the camera cover and place it upright in a ventilated place, and use it again after it is completely dry	
Incorrect password prompt	Forgot password	Enter the super password "1111" to enter the camera, set and remember a new password, or turn off the password.

Does not work properly when using an external power supply	Poor power connection	Check each port to make sure each connector is securely connected
	Wrong external power supply	Replace with a qualified external power supply. Specifications: Voltage DC 6V, current ≥ 2A.
Camera doesn't work properly and functions confusing	Wrong parameter setting	Set correctly. If you don't know how to set it up, please restore the default settings and restart.
Camera does not shoot automatically	Enabled the time-lapse video recording or time-lapse photography function	Disable time-lapse video recording and time-lapse photography. If you don’t know how to setup, please reset and restart the camera.
Can't change to "video mode" or "photo+video"	Time-lapse video recording enabled	Turn off the time-lapse video, if you don’t know how to set it up, please reset and restart the camera.
Other problems	The camera can be powered on, but there are other unusual problems	Replace with fully charged batteries
		Replace with a qualified memory card and format it with the camera
		Reset and restart the camera
If the above methods do not solve the problem, the camera may be damaged, please contact the dealer.		