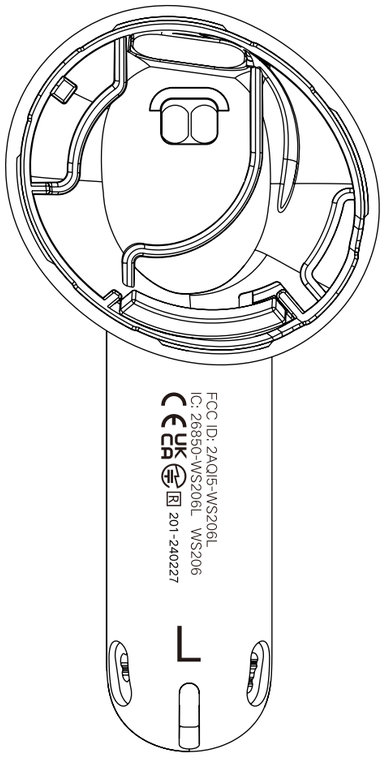
FCC ID: 2AQI5-WS206L
IC: 26850-WS206L WS206
201-240227
L

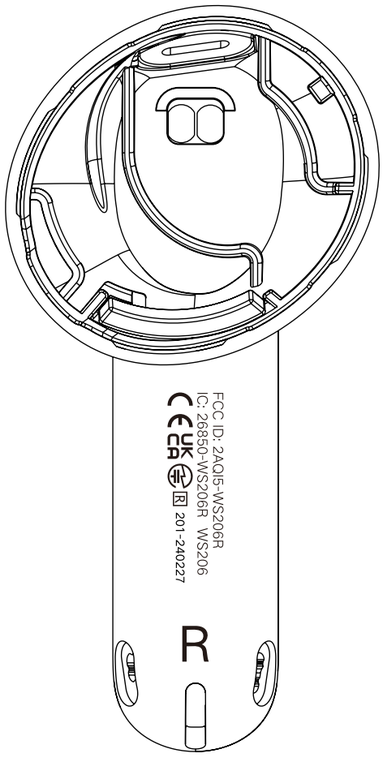
FCC ID: 2AQI5-WS206R
IC: 26850-WS206R WS206
201-240227
R

UGREEN

UGREEN

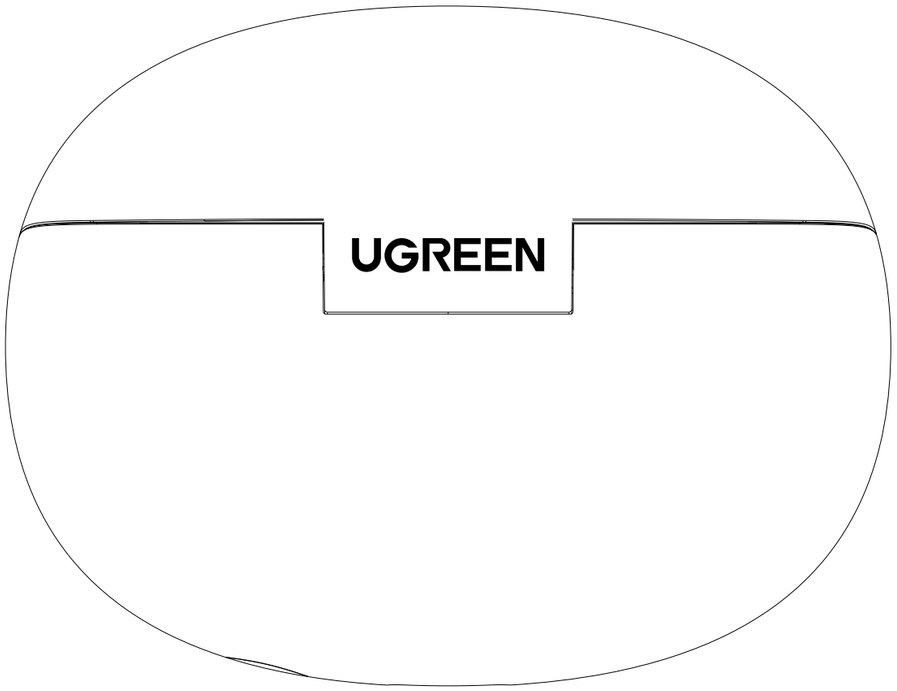
UGREEN

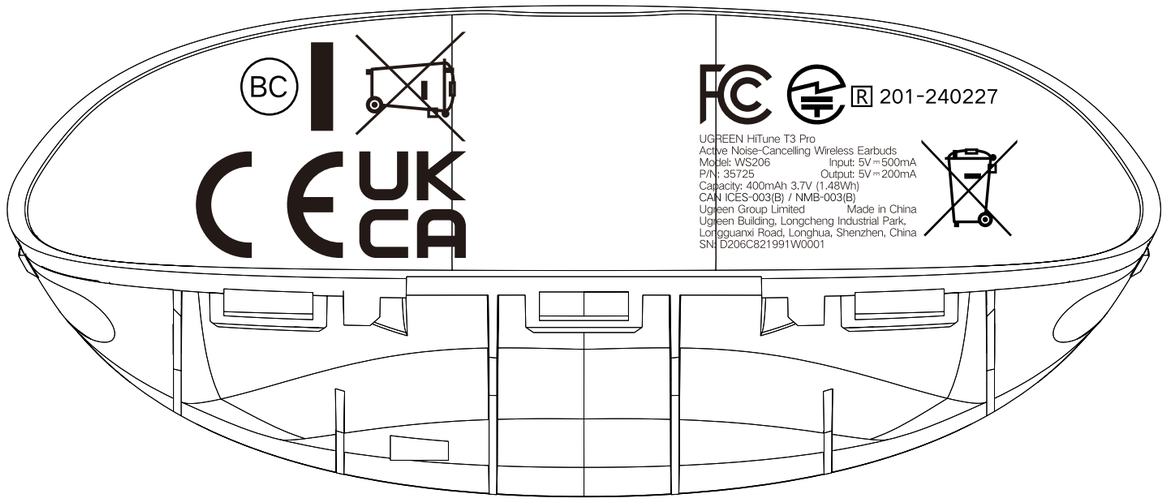
BC
201-240227
UGREEN HiTune T3 Pro
Active Noise-Cancelling Wireless Earbuds
Model: WS206 Input: 5V ⎓ 500mA
P/N: 35725 Output: 5V ⎓ 200mA
Capacity: 400mAh 3.7V (1.48Wh)
CAN ICES-003(B) / NMB-003(B)
Ugreen Group Limited Made in China
Ugreen Building, Longcheng Industrial Park,
Longguanxi Road, Longhua, Shenzhen, China
SN: D206C821991W0001