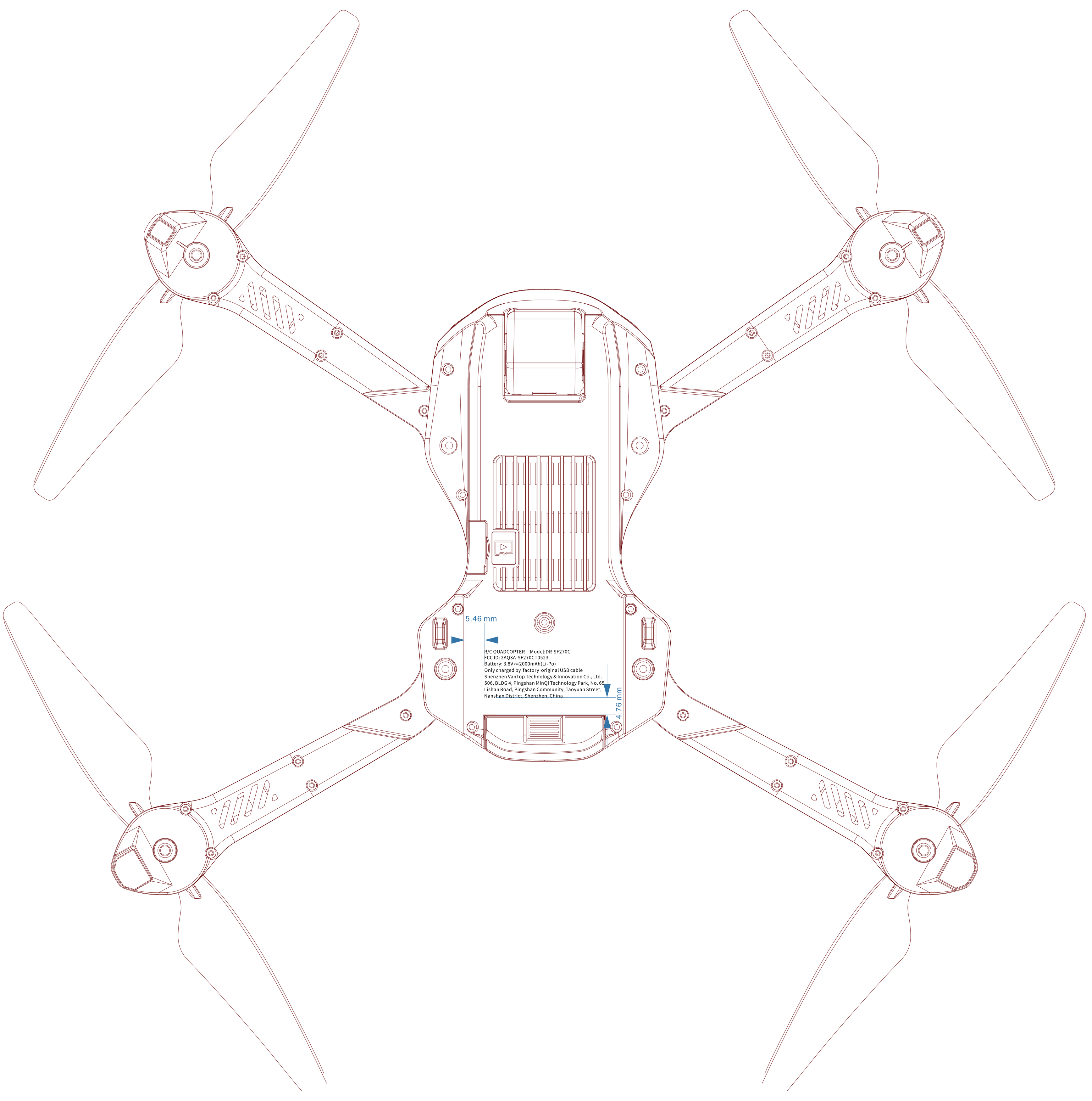

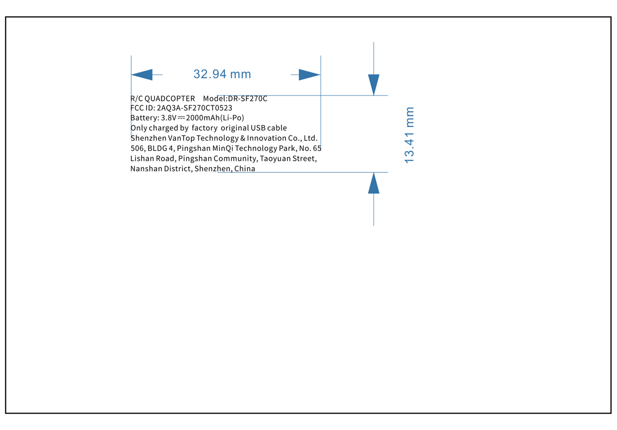
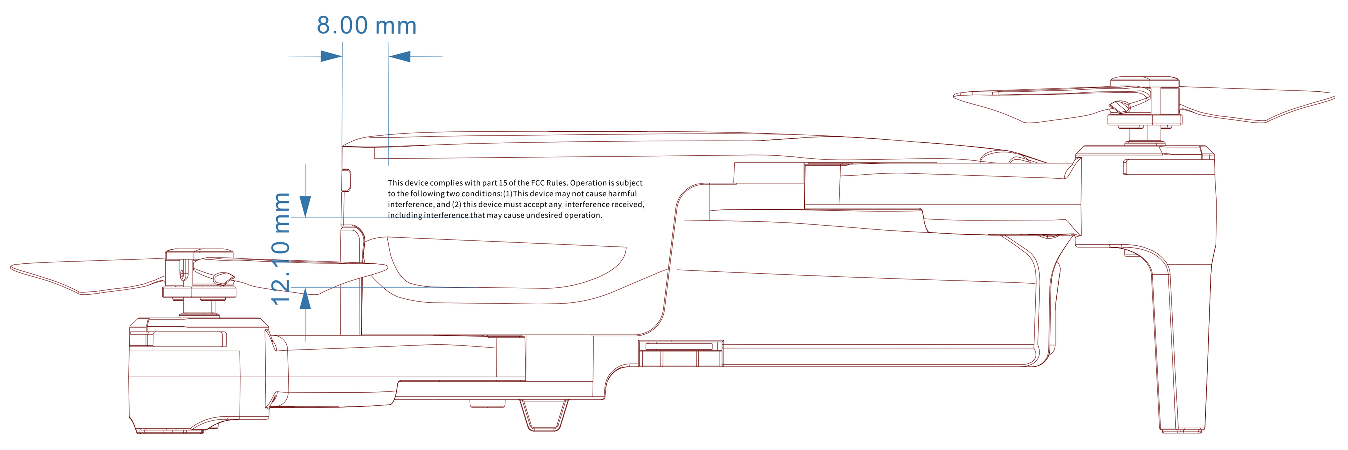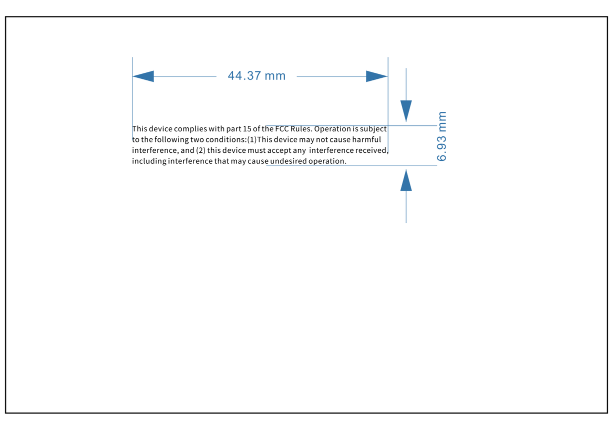
VANTOP
TECHNOLOGY&INNOVATION