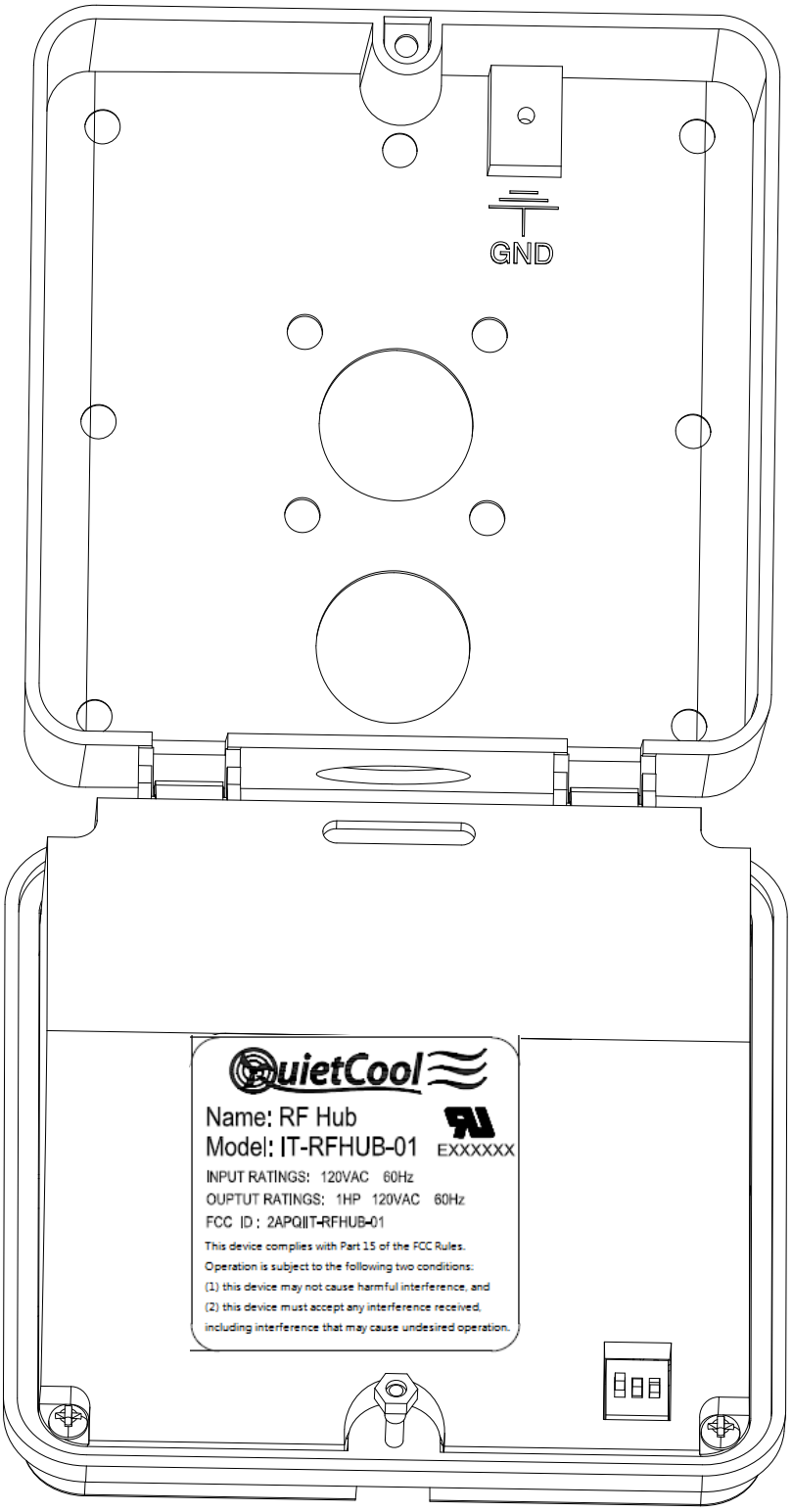
GND
QuietCool
Name: RF Hub
Model: IT-RFHUB-01
EXXXXXX
INPUT RATINGS: 120VAC 60Hz
OUPTUT RATINGS: 1HP 120VAC 60Hz
FCC ID : 2APQIIT-RFHUB-01
This device complies with Part 15 of the FCC Rules.
Operation is subject to the following two conditions:
(1) this device may not cause harmful interference, and
(2) this device must accept any interference received,
including interference that may cause undesired operation.

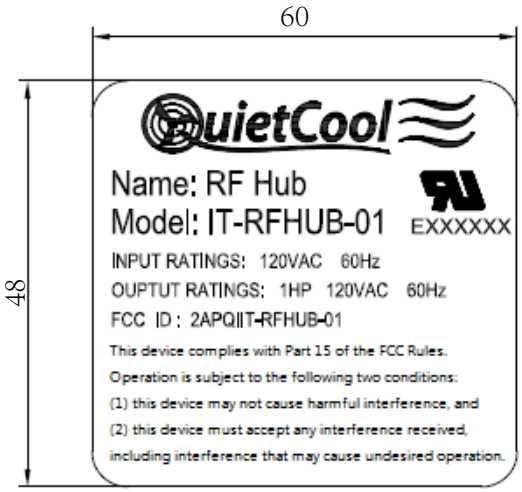
60
48
QuietCool
Name: RF Hub
Model: IT-RFHUB-01
EXXXXXX
INPUT RATINGS: 120VAC 60Hz
OUPTUT RATINGS: 1HP 120VAC 60Hz
FCC ID : 2APQIIT-RFHUB-01
This device complies with Part 15 of the FCC Rules.
Operation is subject to the following two conditions:
(1) this device may not cause harmful interference, and
(2) this device must accept any interference received,
including interference that may cause undesired operation.

Unit: mm