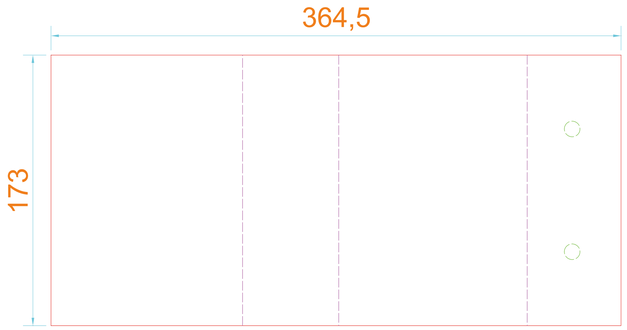

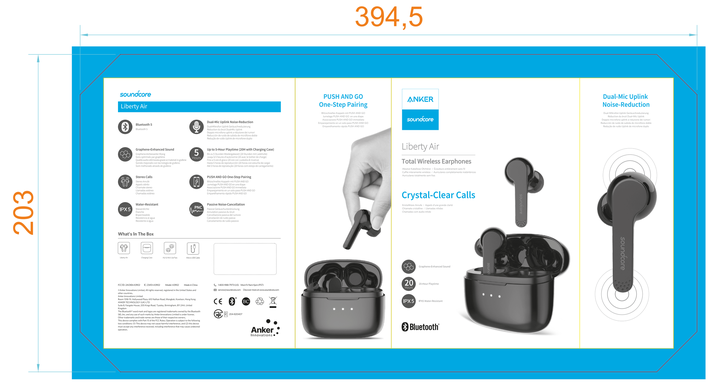

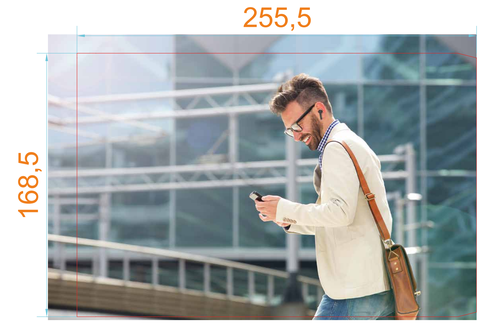

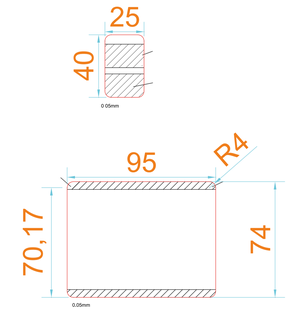

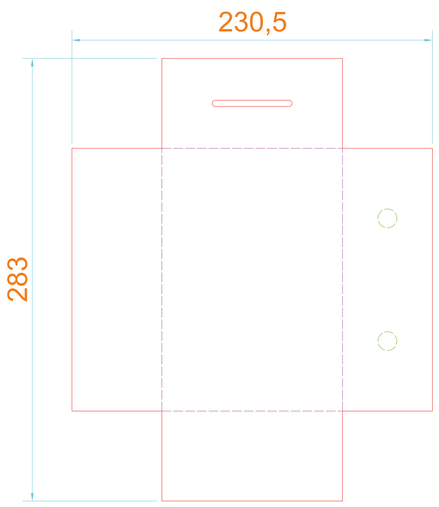

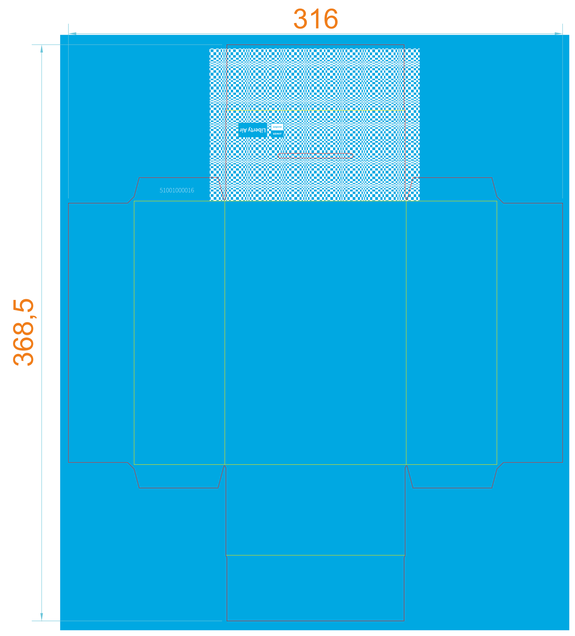

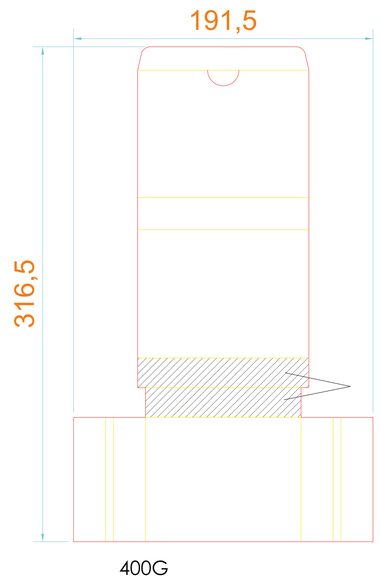

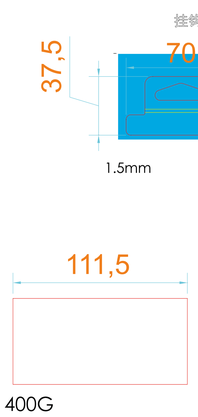

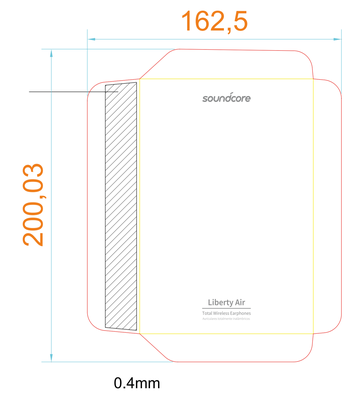
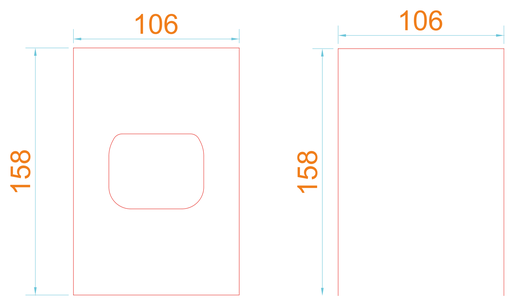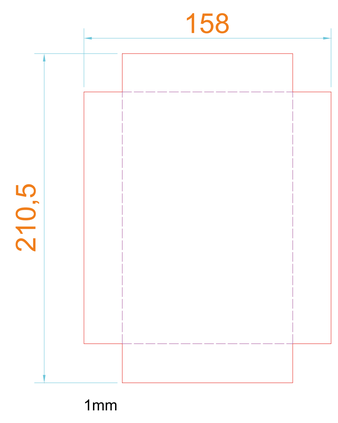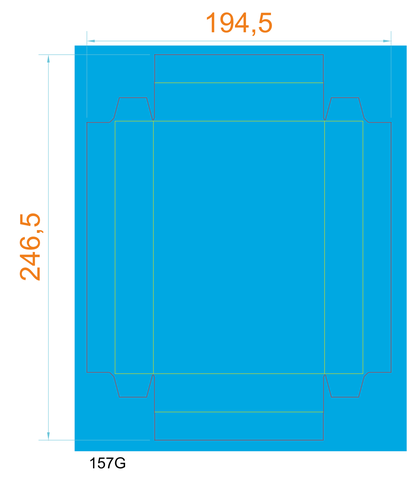
soundcore by ANKER	V1	DATE 07/09/2018	Product Name Liberty Air (white)	BU Audio
SKU A3902J11			OFFLINE	ARTWORKER/DESIGNER niu
PROOF ONLY NOT FINAL ARTWORK		COLOURS Any special colour listed is from the PANTONE MATCHING SYSTEM unless stated otherwise.	CYAN / MAGENTA / YELLOW / BLACK / PMS 2995C / PMS 877C / UV / Dieline	
		7/F, Jianxing Tech Bldg, 3151 Shahe West Road, Nanshan District, Shenzhen City, Guangdong Province, China www.anker.com