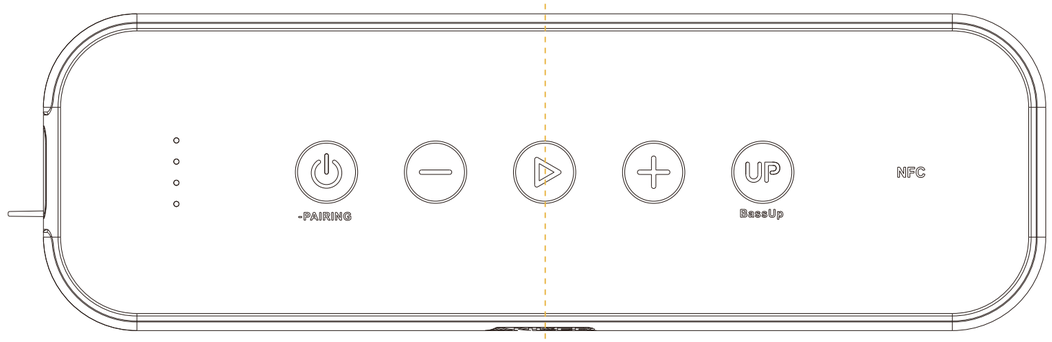
-PAIRING
BassUp
NFC

40mm*21.4mm

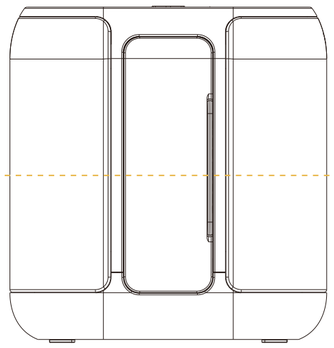

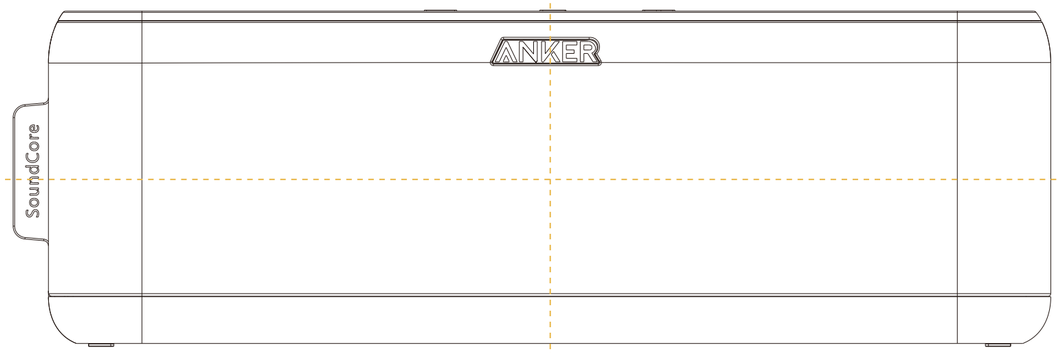
ANKER
SoundCore

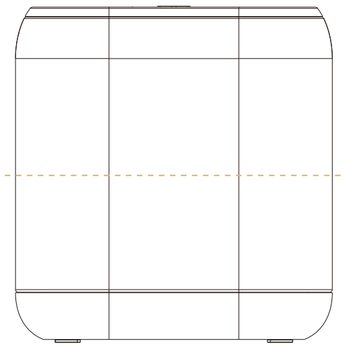

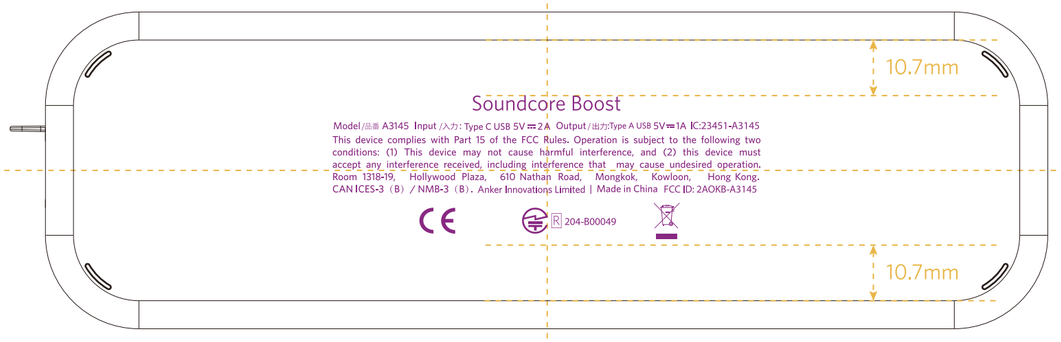
10.7mm
Soundcore Boost
Model/品番 A3145 Input /入力: Type C USB 5V⎓2A Output /出力:Type A USB 5V⎓1A IC:23451-A3145
This device complies with Part 15 of the FCC Rules. Operation is subject to the following two conditions: (1) This device may not cause harmful interference, and (2) this device must accept any interference received, including interference that may cause undesired operation.
Room 1318-19, Hollywood Plaza, 610 Nathan Road, Mongkok, Kowloon, Hong Kong.
CAN ICES-3（B）/ NMB-3（B）. Anker Innovations Limited | Made in China FCC ID: 2AOKB-A3145
R 204-B00049
10.7mm