TEMPCAST FMP100 LABELING EXAMPLES
19.09.2023

FMP102

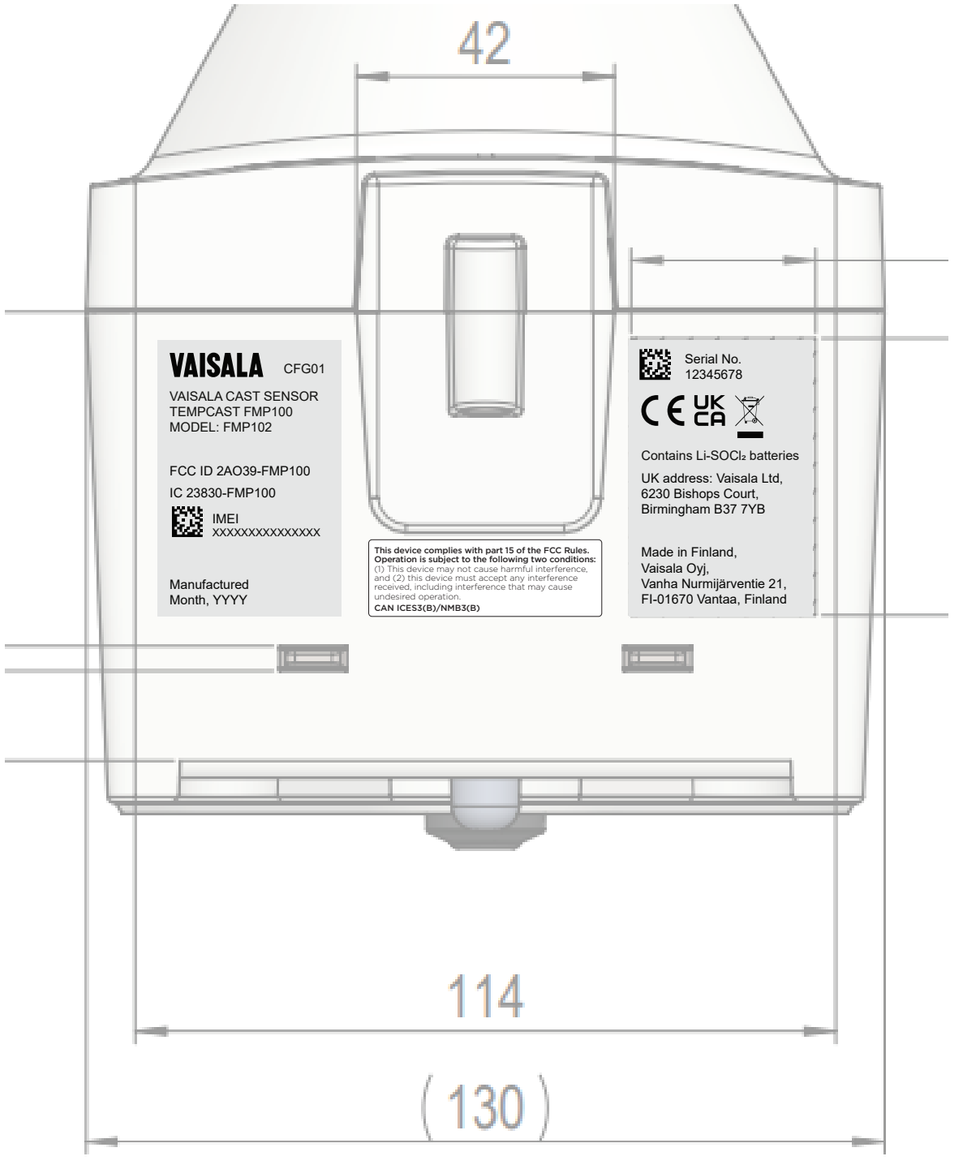
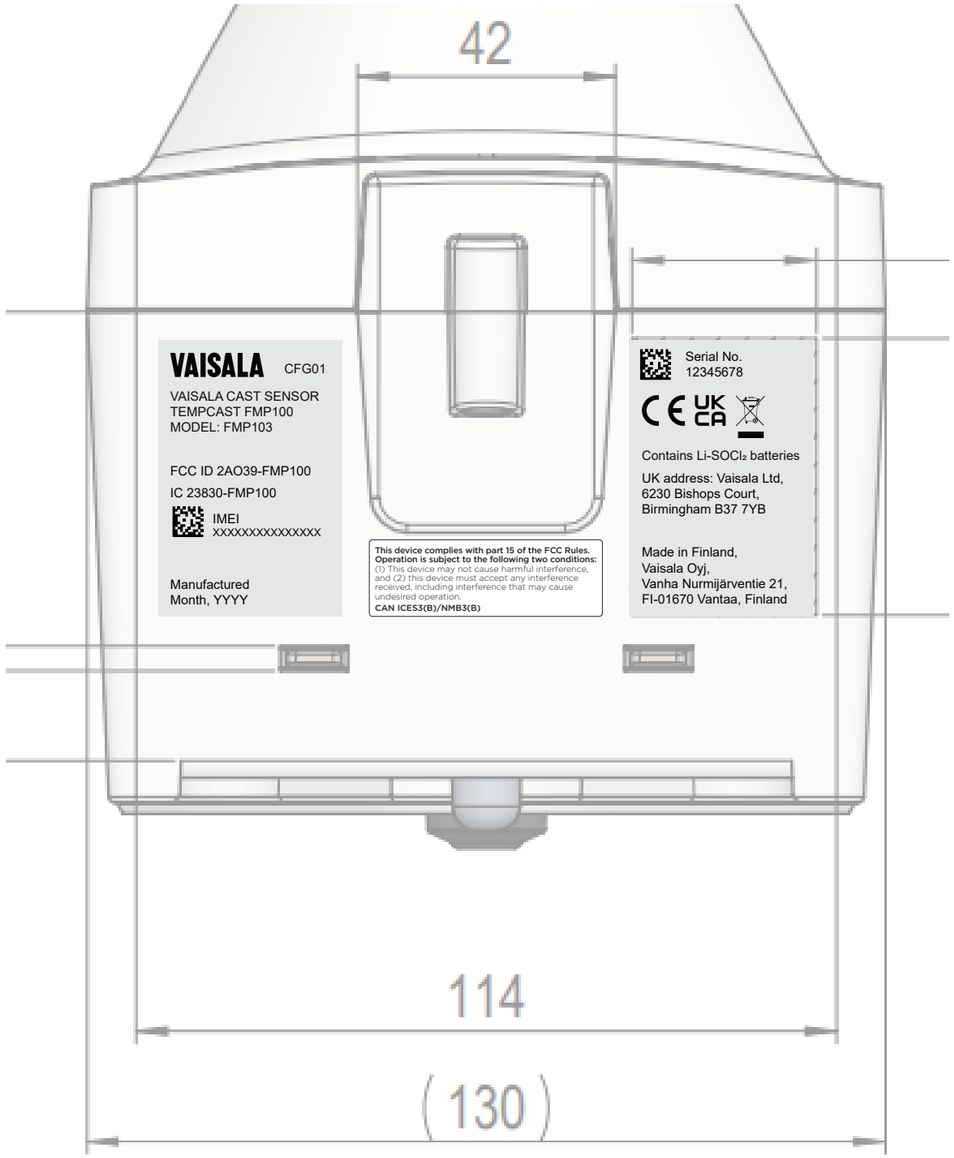
FMP103