Einthoven™ CR1000

Health Sensation System

愛多芬™ 生理感知器

衛部醫器製字 第　　號

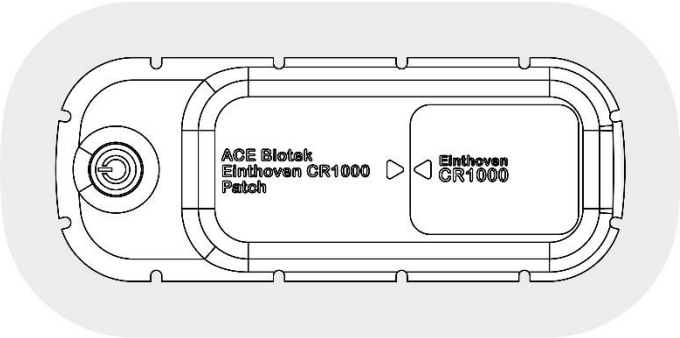

User Manual V1.0

筑波科技股份有限公司
ACE Solution Co., Ltd.

Please read carefully and follow the instructions before use

Please read through this user manual carefully before using the Product, and follow the instructions. Please keep this manual for future reference.

❑ Indications

Einthoven Health Sensation System (Model: CR1000) is designed to continuously measuring, recording and transmitting physiological information. This Product is able to monitor and display Electrocardiography (ECG), heart rate, and events of arrhythmia.

❑ Product description

An Einthoven Health Sensation System (Model: CR1000) consists of a Sensing Patch ("Patch") and a Host Module. This Product receives ECG signals through attaching the Product to a user's left chest and analyzes heart rate / arrhythmia events with the Host Module combined with the Patch; the analyzed data can be transmitted to the user's iOS device through Bluetooth connection. This product is expected to be used in at homes or in hospitals.

❑ Product Contents

1. One (1) Host Module;
2. Two (2) Sensing Patches.
3. Einthoven iOS App (Requires manual download from Apple App Store)

Host Module must be combined with Patch in order to perform its functions.

❑ Components Identification

✓ Host Module

Top side

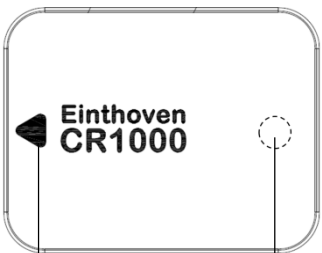

Indication Arrow (Host)

LED Light (Invisible when not lit)

Bottom side

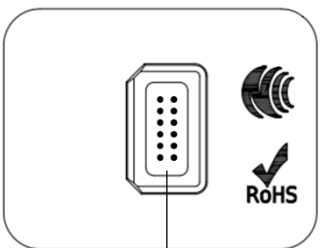

Connector

Caution:

1. When connecting Host Module to the Patch, make sure the both indication arrows are pointing to each other.
2. The connector should always be kept dry.

✓ Sensing Patch (Patch)

Top Side

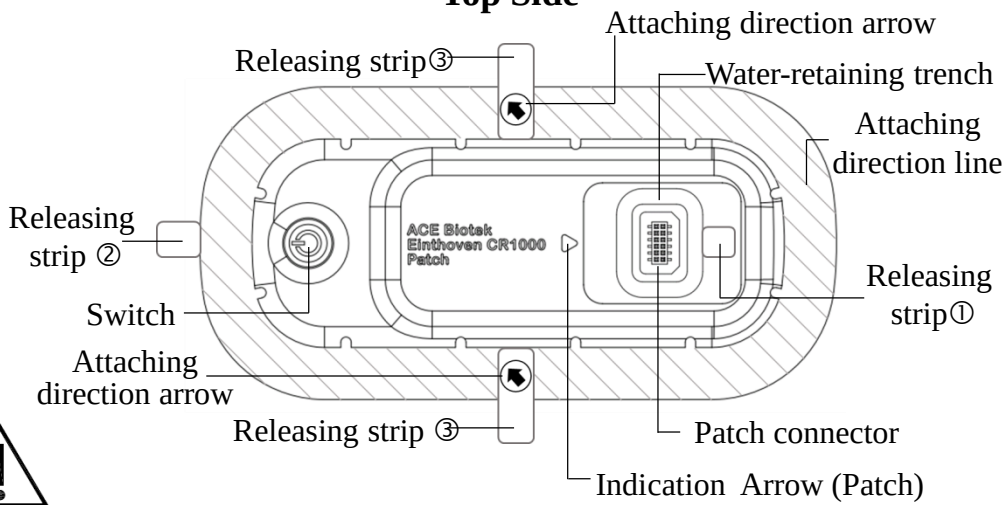

Caution:

1. Patches are intended for single use only.
2. Please partially remove the releasing strips only following the manual's direction.

Bottom Side

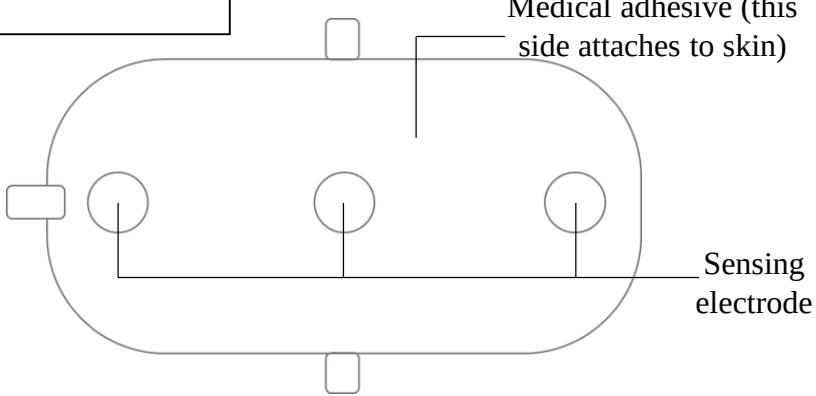

✓ Einthoven iOS App

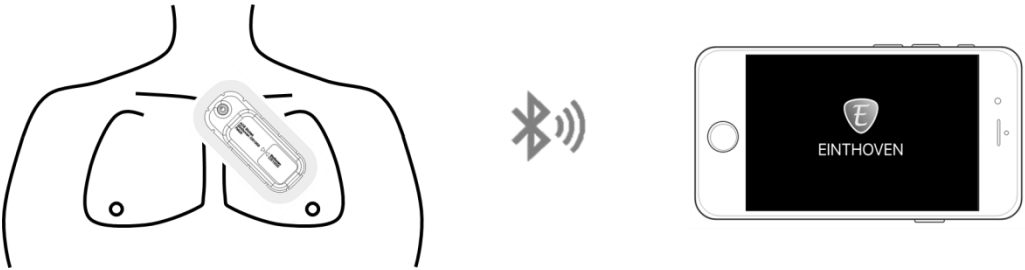

Einthoven iOS App receives analyzed physiological information from the Product and display/store the information in your portable device. Please download and install the App through Apple App Store and follow the instructions to use.
*(*System requirement: iOS 10 or higher)*

❑ How to Clean the Product

- Please clean the outside surface of the Host Module with a clean cloth moistened with ethanol.

❑ Product Usages

- Monitoring and collecting personal physiological information;
- Real-time analyzing common arrhythmia events;
- Providing reference for clinical diagnosis related to heart rhythm or arrhythmia events.

❑ Legends

	Manufacturer		For single use only Do not reuse
	Manufacturing date		Please carefully read through the user manual before use
LOT	Manufacturing batch number		Avoid high temperature or exposure to sunlight
SN	Product serial number		Keep it dry
	Expiry date	93% 15%	Storage humidity range
	Non-ionizing radiation	70°C -25°C	Storage temperature range
IP33	IP Code (protection level) Solid particle protection: 3 Liquid ingress protection: 3		Direct current
	Do not use if the package is damaged		Type BF applied part
	Electronic waste shall be recycled properly		Caution: Please pay attention to the important notice in order to prevent unwanted consequences

Side Effects

◎ Patch attached to skin for an extended period might cause an itch or allergic reaction.

Contraindication

◎ Do not use this Product on patients who has acute or severe syndrome.
◎ Do not use this Product when user's skin is allergic to adhesives or gel.
◎ Do not use this Product if a patient potentially has life-threatening arrhythmia.
◎ This Product is not designed for users under age 16.

Cautions and Important Notices

◎ Please carefully read through this manual before use, and following all the instructions while use.
◎ Please check the packages of each components carefully after receiving the Product. The Patch is sealed within an aluminum moisture-proof bag, if the bag or the Patch itself is damaged, please do not use that Patch.
◎ Do not use this Product out of its intended use.
◎ Do not disassemble the Patch or the Host Module themselves; it might cause undesired consequences.
◎ After combining the Host Module and the Patch and attached the Patch to a user's body, please do not remove the Host Module from the Patch before the end of monitoring.
◎ The Patch is for single use only. Reuse may make the user feel uncomfortable and derogate normal functions of the Product.

◎ This Product is not designed for self-diagnosis purpose. Please seek for physicians' advice or diagnosis. Self-diagnosis may cause life-threatening consequences.
◎ Remove this Product before being conducted an MRI scanning.
◎ This product shall not be used along with cardiac pacemaker or internal/external defibrillator.
◎ This product shall not be used near a high-frequency signal generator; there might be signal interference or loss of real-time data.
◎ If feeling uncomfortable after attaching the Product to your skin, please remove the Product immediately.
◎ Please do not attach the Product to allergic/inflammatory/wounded skin or skin with any other illness.
◎ In order to keep an unused Product in good status, please store it safely at a dry and clean place before use, and prevent direct sunlight.
◎ The Host Module and Patch individually shall be kept dry before combined. The Product (when the Host Module is combined with the Patch) is water-resistant but not water-proof; do not soak the Product in water. (It is fine to take a shower while wearing it, but please do not swim or take a bath.)
◎ The Product contains small components, please keep it away from children to prevent choking hazard.
◎ Please do not store the Product under temperature below -25°C (-13°F) or over 70°C (158°F).
◎ Please do not use Product after its expiration date.
◎ When dispose the Host Module or the Patch, please follow applicable waste disposal laws and regulations in your region. Please note that the Host Module contains printed circuit board and the Patch contains lithium battery.

This Product Complies with the following Requirements in Administrative Regulations on Low Power Radio Waves Radiated Devices in Taiwan

◎ Art.12: Without permission granted by the NCC, any company, enterprise, or user is not allowed to change frequency, enhance transmitting power or alter original characteristic as well as performance to a approved low power radio-frequency devices.

◎ Art. 14: The low power radio-frequency devices shall not influence aircraft security and interfere legal communications; If found, the user shall cease operating immediately until no interference is achieved.
The said legal communications means radio communications is operated in compliance with the Telecommunications Act.
The low power radio-frequency devices must be susceptible with the interference from legal communications or ISM radio wave radiated devices.

Europe – EU Declaration of Conformity

This device complies with the essential requirements of the Radio Equipment directive: 2014/53/EU. The following test methods have been applied in order to prove presumption of conformity with the essential requirements of the Radio Equipment directive:

- 2014/53/EU
- IEC 60601-1
- IEC 60601-1-2
- IEC 60601-1-11
- IEC 60601-2-47
- EN 300 328
- EN 301 489-17
- FCC 47 CFR Part 15B
- FCC 47 CFR Part 15C
- LP0002

The minimum distance between the user and/or any bystander and the radiating structure of the transmitter is 20 cm.

⚠ *Federal Communication Commission Interference Statement*

This equipment has been tested and found to comply with the limits for a Class B digital device, pursuant to Part 15 of the FCC Rules. These limits are designed to provide reasonable protection against harmful interference in a residential installation. This equipment generates, uses and can radiate radio frequency energy and, if not installed and used in accordance with the instructions, may cause harmful interference to radio communications. However, there is no guarantee that interference will not occur in a particular installation. If this equipment does cause harmful interference to radio or television reception, which can be determined by turning the equipment off and on, the user is encouraged to try to correct the interference by one of the following measures:

- Reorient or relocate the receiving antenna.
- Increase the separation between the equipment and receiver.
- Connect the equipment into an outlet on a circuit different from that to which the receiver is connected.
- Consult the dealer or an experienced radio/TV technician for help.

FCC Caution：Any changes or modifications not expressly approved by the party responsible for compliance could void the user's authority to operate this equipment.

This device complies with Part 15 of the FCC Rules. Operation is subject to the following two conditions：(1) This device may not cause harmful interference, and (2) this device must accept any interference received, including interference that may cause undesired operation.

IMPORTANT NOTE:

Radiation Exposure Statement：

The product comply with the US portable RF exposure limit set forth for an uncontrolled environment and are safe for intended operation as described in this manual. The further RF exposure reduction can be achieved if the product can be kept as far as possible from the user body or set the device to lower output power if such function is available.

This transmitter must not be co-located or operating in conjunction with any other antenna or transmitter.

FCC ID：2AO36BIOTEK-EINCR1K

❑ How to use

Before use:

1. Please remove body hair covering the intended attaching area (left chest).
2. Please clean the attaching area (left chest) before use, in order to prevent discomfort.
3. Keep the attaching area clean and dry, please do not apply lotion, perfume or other oils.

◆ Step 1: Release Releasing Strip①

1) Take out the Patch from its sealed package, and remove the release paper of releasing strip①. (Note: The Patch is for single-use only, open its seal will make it be seemed as used.)

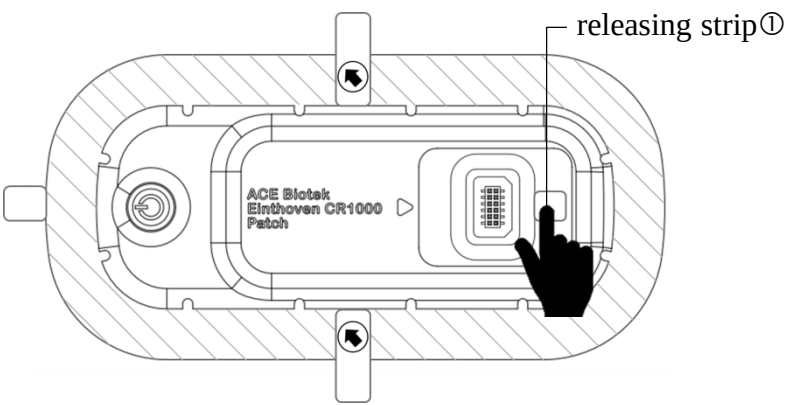

◆ Step 2: Combine the Host Module with Patch and Turn on the Power

1) Put the Patch horizontally on the desk top to continuing the combining process.

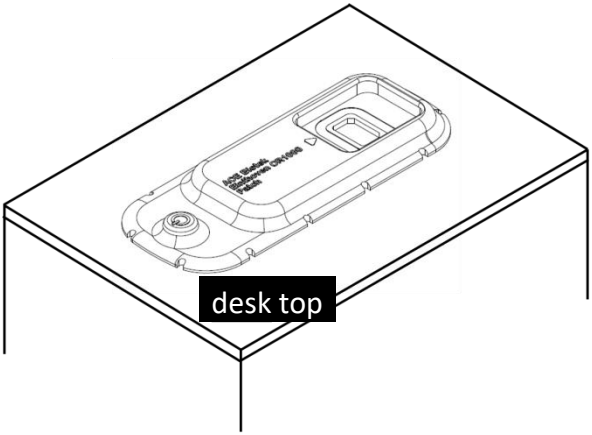

2) Make sure the two indication arrows on the Host Module and on the Patch are pointing to each other, and insert Host Module into the patch opening as the figure below shows.

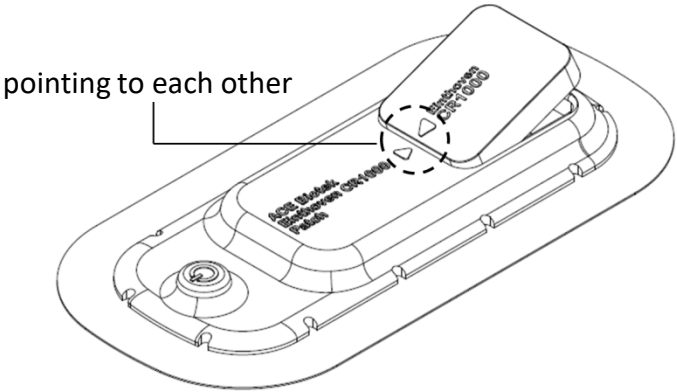

3) Press down the Host Module to combine the connectors of the Host module and the Patch; make sure to press the Host Module hard until it is tightly combined with the Patch.

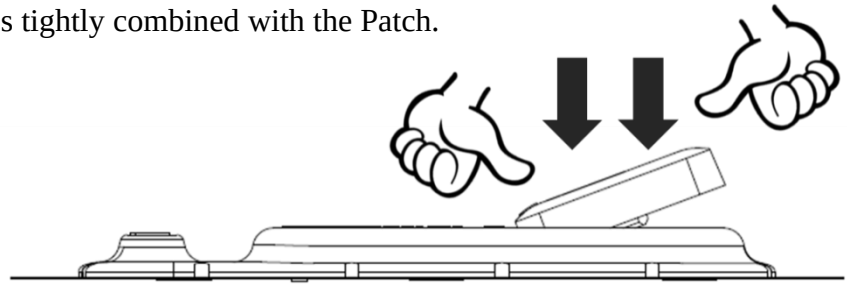

4) **Long press the power switch on the Patch for 2 seconds** until the LED light on the Host Module start to blink in green (indicating it is ready for pairing); the LED light will be off after 10 seconds and the Host Module will turn into stand-by mode at the same time, waiting for setting up connection with a mobile device. If the green light is not on after pressing the switch, please repeat step 2 and make sure the Host Module is tightly combined with the Patch.

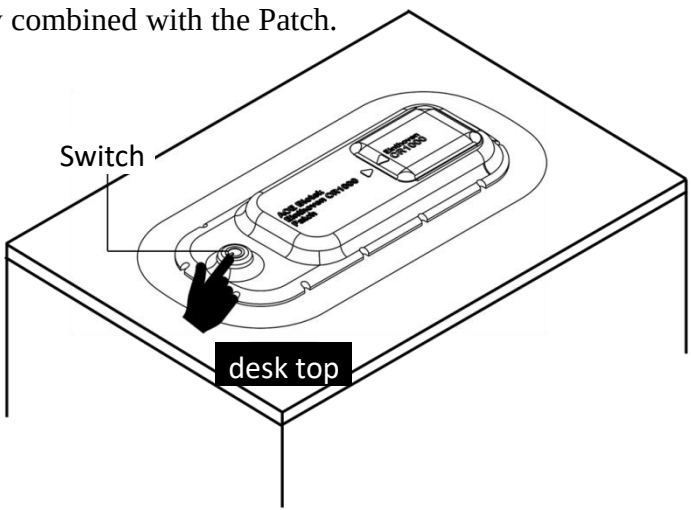

◆ Step 3: Turn on Einthoven iOS App and pairing it with the Host Module

1) Download **Einthoven iOS App** from Apple App Store to your mobile device (which is supported by the App), and turn on the App and Bluetooth connection.

2) At the first-time use or when adding a new user, please press “Register” to enter the registration page; for log-in, press “Log in” to enter the main menu.

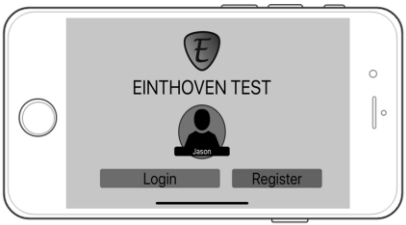

3) After entering the registration page, please enter name and gender, then press “confirm”.

4) After entering the main menu, press **“Start recording”** to enter the pairing screen; press **“Historical record lookup”** to enter the historical record list.

5) After entering the pairing screen, please refer to the last two digits of the serial number **on the back of the Host Module** or **on its package**, and select the corresponding name of Host Module (e.g. If the last two digits is “**00**”, please select “Einthoven CR1K-**00**” from the list); a monitoring screen will shown up if the connection is successfully set up.

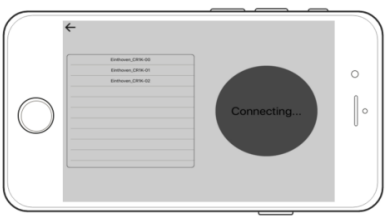

6) First after entering the monitoring screen, a message suggesting attaching the Product will be shown on the screen. Please be prepared to attach the Product onto the user’s left chest. The App will make a beep sound every 10 seconds until the Product has been attached to a human body.

◆ Step 4: Attach the Product to User's left chest

1) By pulling Releasing strip②, Partially remove the release paper on the bottom side of the Patch to the extend shown in the 2nd figure below.

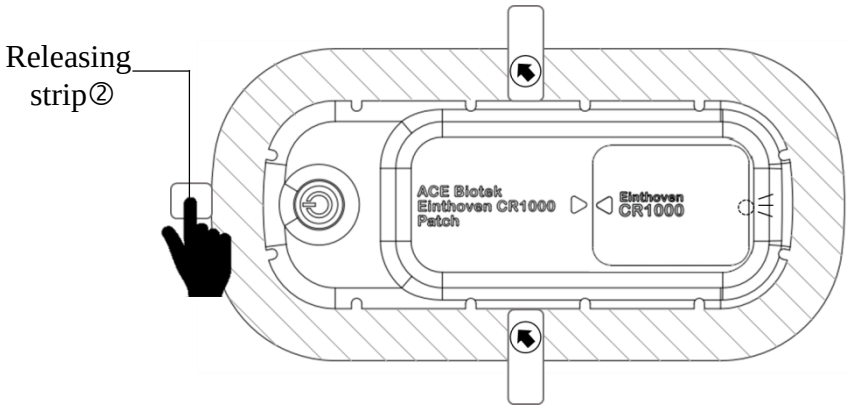

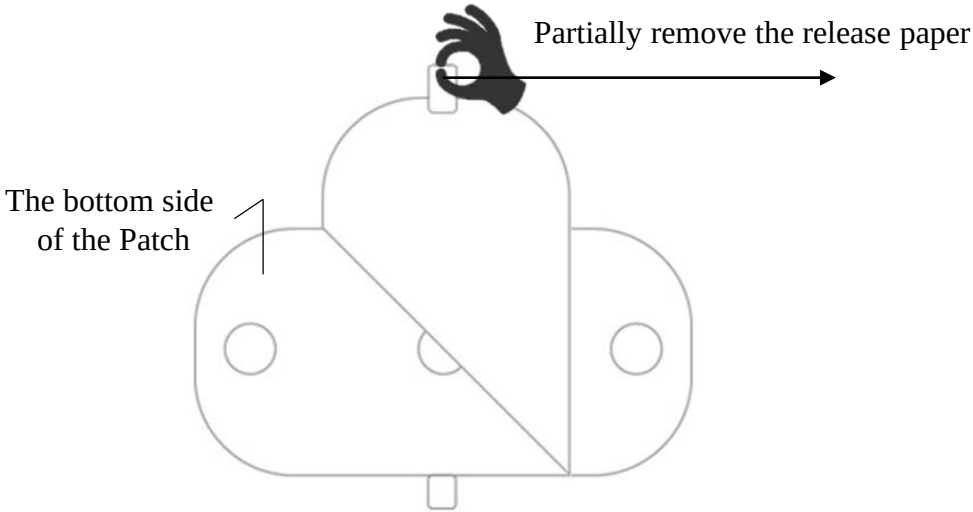

2) The Product should be attached onto the left chest, and the distance from the lower limit of the neck to the Product is about 3 cm (roughly the width of two fingers); the expected attaching area is shown as the dotted circle in the figure below.

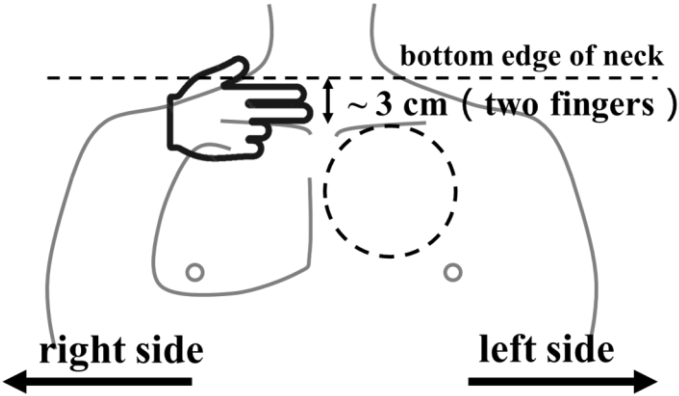

3) Attach the Product (which the release paper is partially removed) to the left chest with the attaching direction arrow and attaching direction lines pointing upwards.

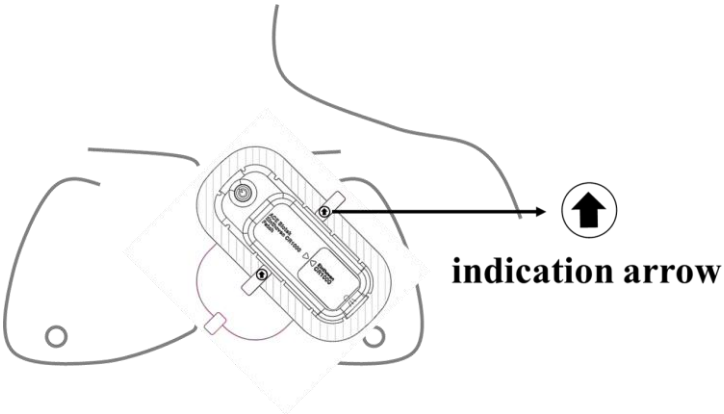

4) Remove the remaining part of release paper of the Patch bottom, and attach the whole Patch firmly to the chest.

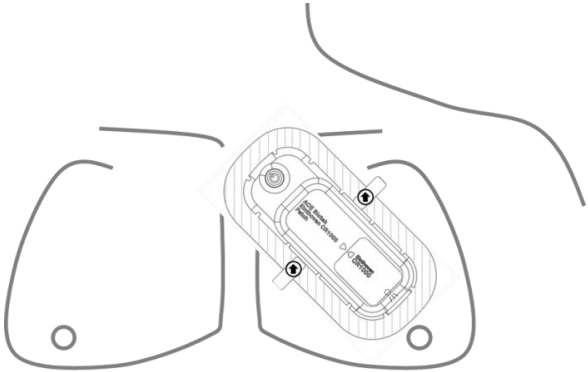

5) Remove the release paper covering the top surface by pulling the releasing strip ③ toward the direction shown in the figure below.
6) Press the adhesive surrounding the Patch toward user's skin, make sure the Patch is attached firmly to the skin.

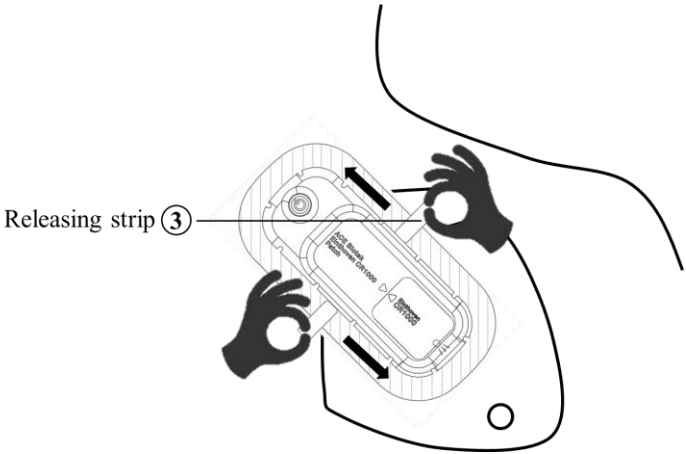

◆ Step 5: The Monitoring Screen

- **Arrhythmia detection:** shows the real-time analysis of user's heart rhythm; the detectable abnormal heart rhythms are:
  - ✓ "Normal": Normal heart rhythm
  - ✓ "VEB" (with yellow frame) : Ventricular ectopic beats
  - ✓ "SVEB" (with yellow frame) : Supraventricular ectopic beats
  - ✓ "Unreadable": Too much noise, unable to analyze.
- **ECG display:** Showing user's real-time single-lead ECG.
- **Settings:** User can change language and heart-rate notification settings here.
- **Stop recording:** To stop recording and return to the main menu.
- **Amplitude adjustment**: To change the amplitude unit in the ECG display.

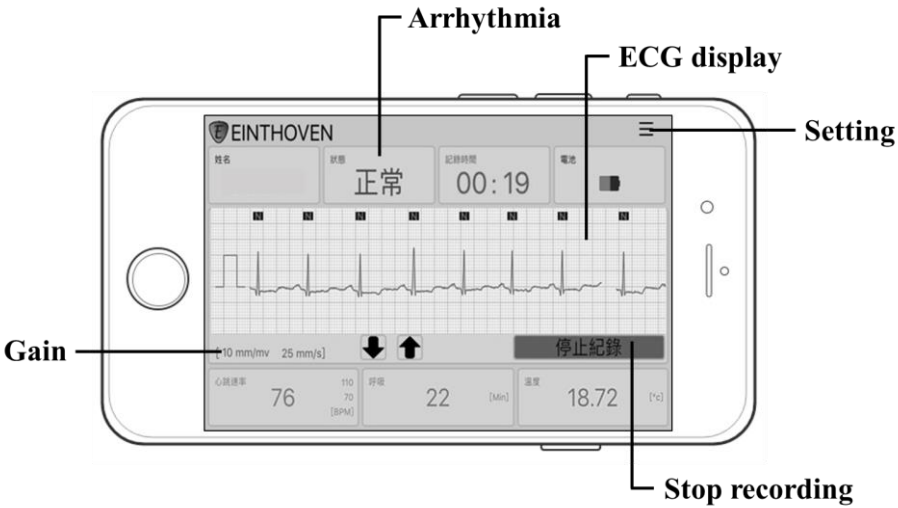

◆ Step 6: Start monitoring

➢ The Product will transmit real-time analysis data to user's mobile device through Bluetooth connection to show and store the data on user's device. Pleas keep the **Einthoven App** running and keep the mobile device in front of the user within 3 m, and avoid any obstacles in between, to prevent disconnection.

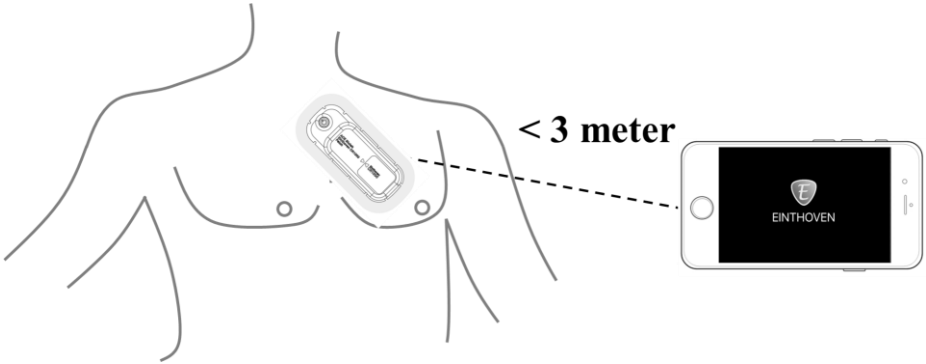

➢ If the Bluetooth connection is lost, the Einthoven App will notify the user with sound and message, at the same time to try reconnecting automatically. If the App does not automatically reconnect, please combine the Host Module and the Patch following the figure below.

❑ How to Remove the Product

1) When the Product has been used for over 72 hours, or the "battery running out" notification is shown, please slowly tear off the Product along the direction shown in the figure below.

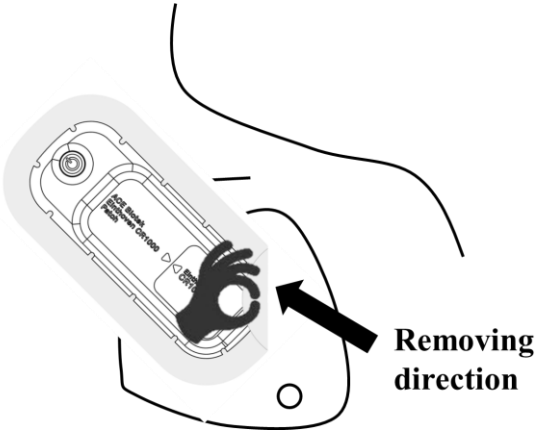

2) After tearing the Product off user's skin, please first bend the Patch toward the direction of ①, then remove the Host Module by pulling up the Host Module toward ②.

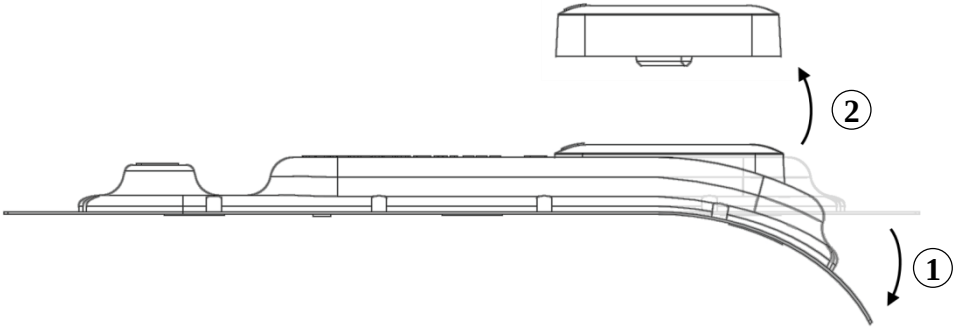

❑ How to Look up Stored Physiological Information and Historical Records:

1) User's physiological information will be stored in the mobile device. In the main menu of Einthoven iOS App, please press "Historical record lookup" and enter the historical record menu.

2) In the historical record list, user can look up for specific data by "date", "initializing time", "record time length" and "labels", then click and enter the record screen.

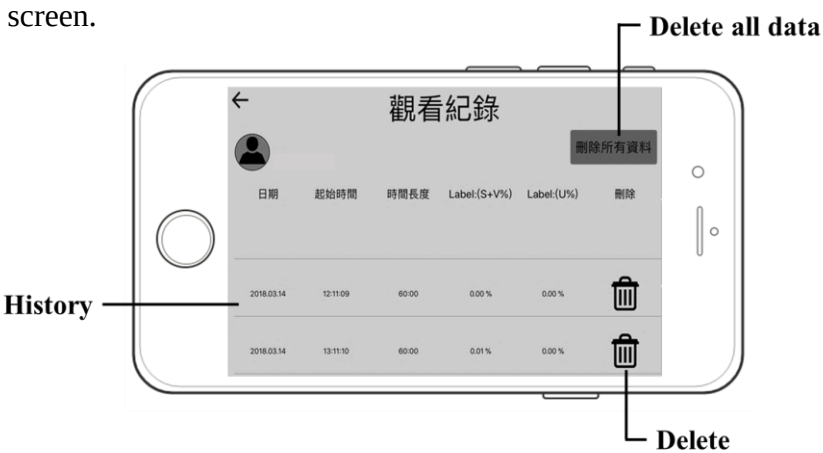

3) After entering the record screen, user can select which interval to view by horizontally swiping the ECG display, or by directly selecting from recorded intervals. The functions shown in the record screen are as the following:

- **ECG display:** displays historical ECG records.
- **Smart interval:** press the arrow to jump to the previous or next interval with "S" or "V" labels. Press the "smart interval" message itself to switch between S and V interval.
- **Product link status:** shows if the Product is connected or disconnected from this device.
- **Interval selection:** immediately jump to specific time point in the ECG record.
- **Time and date:** Shows the time and date of the current displayed ECG interval.
- **Amplitude adjustment**: To change the amplitude unit in the ECG display.

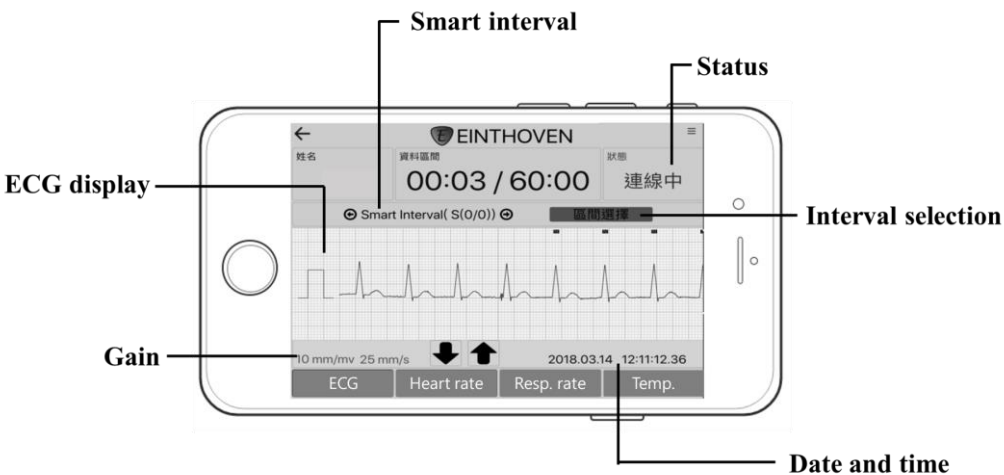

❑ Product Specifications

Product Name	Einthoven CR1000 Health Sensation System	
Component	Host Module	Patch
Firmware version	V1.0.0	N/A
Useful life	500 times	70hours, non-rechargeable
Operating temperature	5 ~ 40℃	5 ~ 40℃
Storage temperature	-25 ~ 70℃	-25 ~ 70℃
Operating humidity	15 ~ 93%	15 ~ 93%
Storage humidity	15 ~ 93%	15 ~ 93%
Operating pressure	700 ~ 1060 hPa	700 ~ 1060 hPa
Wireless connection	Bluetooth 4.0	N/A
Battery	N/A	Lithium battery (3 V, 600 mAh)
Weight	4.7 g	22.9 g
Dimensions	24 x 31 x 7 mm (W x L x H)	40 x 102 x 7.23 mm (W x L x H)

Sampling rate	250 Hz	N/A
ECG resolution	12 bits	
Input dynamic range	+/- 5 mV	
Initial input dynamic range	+/- 300 mV	
Input resistance	> 10 MΩ	
Frequency range	0.05 – 40 Hz	
Common-Mode Rejection Ratio	> 60 dB	
Heart rate monitoring range	25 ~ 250 bpm	

❑ LED Light Indications

LED Light
(Invisible when not lit)

Product Status	Switch	LED Color	Blinking interval	Meaning
Not attached	Press long	Green	Short (0.5 sec)	Pairing with device
Attached to user	Press long	Green	Short (0.5 sec)	Pairing with device
	-	Green	Long (3sec)	Sending data
	Press long	Green	Long (3sec)	Sending data

❑ Arrhythmia Detection

- This Product detects arrhythmia based on user's heart rate, heart rhythm and ECG characteristics, and will label the type of arrhythmia on each R-wave when it have detected arrhythmia event. For the types of arrhythmia this product detects, please refer to page 18.

❑ Heart rate Detection and Notification

- This Product calculate heart rate based on time interval between two continuous R-wave. The heart rate will renew based on 3-second averages.
- User can set a notification range in Einthoven iOS App; when the detected heart rate is not within the set range, a notification will show in the App.
- This Product complies the requirement in ANSI EC57. The sensitivity and positive predictivity of the Product based on the testing results by conducting test with database data are listed in the table below:

Testing objective	Sensitivity (%)	positive predictivity (%)
QRS-wave detection (average) 30 bpm ≤ Heart rate range <165 bpm	AHA: 98.26 MIT-BIH: 99.12	AHA: 99.69 MIT-BIH: 99.84
QRS-wave detection (gross) 30 bpm ≤ Heart rate range <165 bpm	AHA: 98.34 MIT-BIH: 99.05	AHA: 99.79 MIT-BIH: 99.83

❑ Troubleshooting

Q1: I long pressed the switch on the Patch, but nothing happened.

A: Please refer to “How to Use- Step 2” on page 13, and make sure the Host Module have been combined firmly with the Patch.

Q2: After entering the main menu in the App, I pressed “Start recording”, but the App still stays at the connection screen instead of switches to the monitoring screen.

A: Please first confirm again that your device OS is supported by this App; then check if the Bluetooth connection on your device is turned on. Also, please refer to “LED light indications” section on page 25, to check if the Host Module is pairing with your mobile device.

Q3: Why do I keep receiving the “connection lost” message while monitoring?

A: Please keep your mobile device in front of you within 3-m range. If you still keep receiving this message, please try hanging your mobile device against your chest.

Q4: What should I do if the Host Module disengages from the Patch while I’m still wearing the Product?

A: Please refer to “How to Remove the Product” section and remove the Product from your body, exchange the Patch with a new one, and following “How to Use” to re-start the monitoring. (Please make sure the Host Module and the Patch is combined completely.)

❑ Adverse Event Reporting

If any adverse event happens during the use of Product, please immediately notify our customer service, and/or report to the authorities following the instruction:

https://www.fda.gov/Safety/MedWatch/HowToReport/default.htm

Manufacturer: ACE Solution co. ltd.
Manufacturer address: 2F.-1, No.28, Taiyuan St., Zhubei City, Hsinchu County 302, Taiwan (R.O.C.)
Customer service hotline: +886-3-5525633
Customer service: service@acebiotek.com