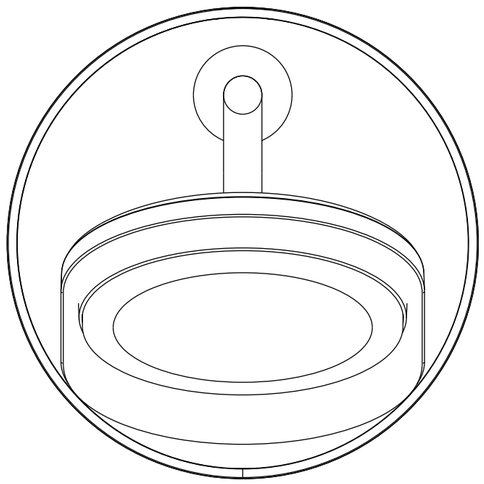

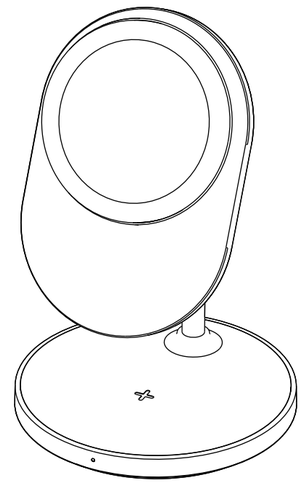

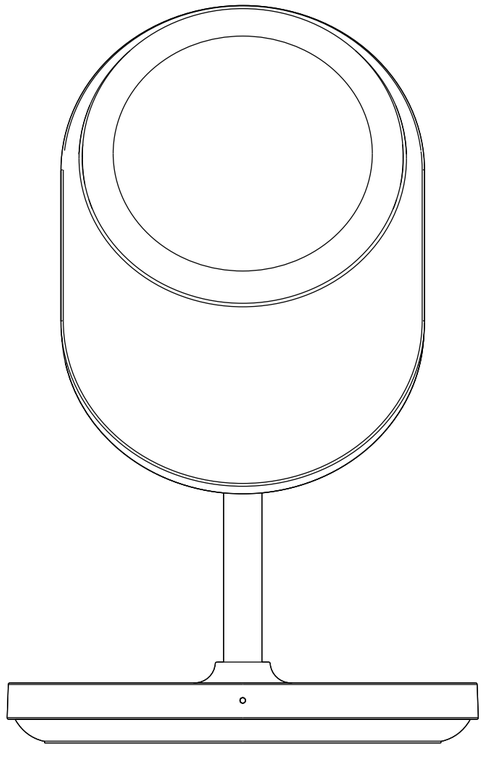

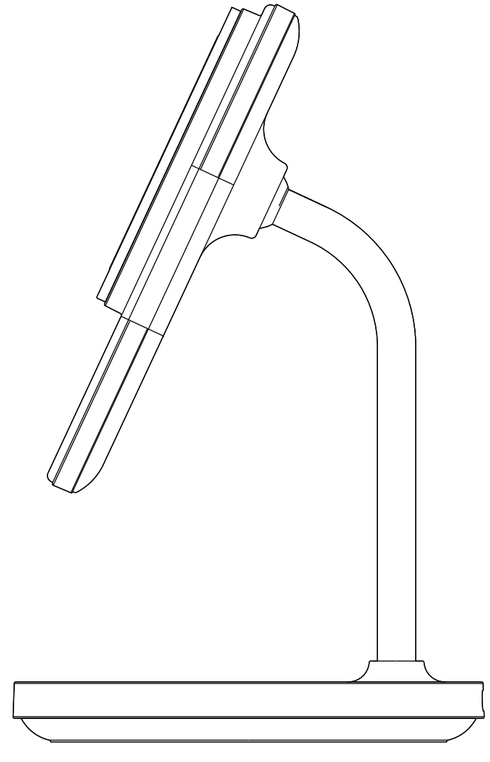

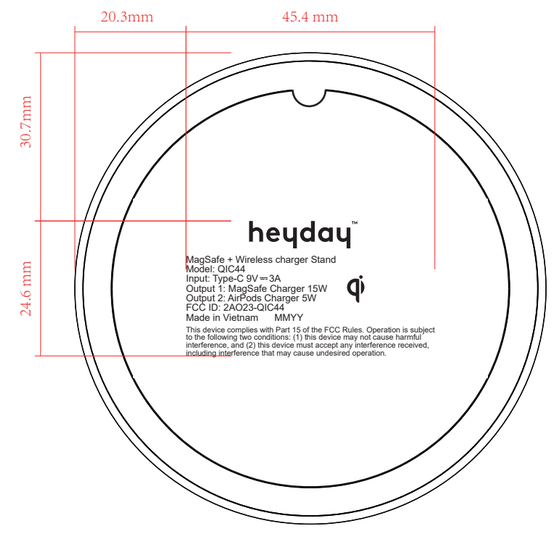
20.3mm
45.4 mm
30.7mm
24.6 mm
heyday™
MagSafe + Wireless charger Stand
Model: QIC44
Input: Type-C 9V⎓3A
Output 1: MagSafe Charger 15W
Output 2: AirPods Charger 5W
FCC ID: 2AO23-QIC44
Made in Vietnam MMYY
This device complies with Part 15 of the FCC Rules. Operation is subject to the following two conditions: (1) this device may not cause harmful interference, and (2) this device must accept any interference received, including interference that may cause undesired operation.

丝印