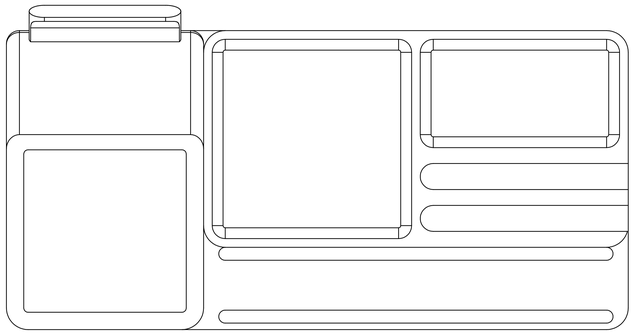

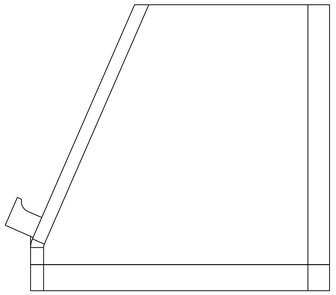

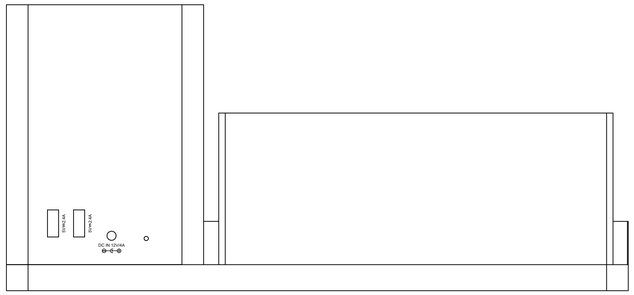
USB-A 2.4A
USB-A 2.4A
DC IN 12V/4A

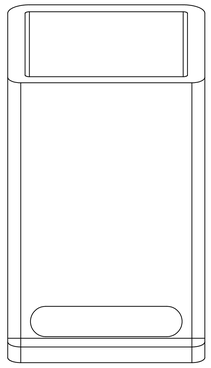

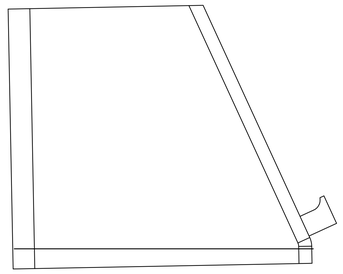

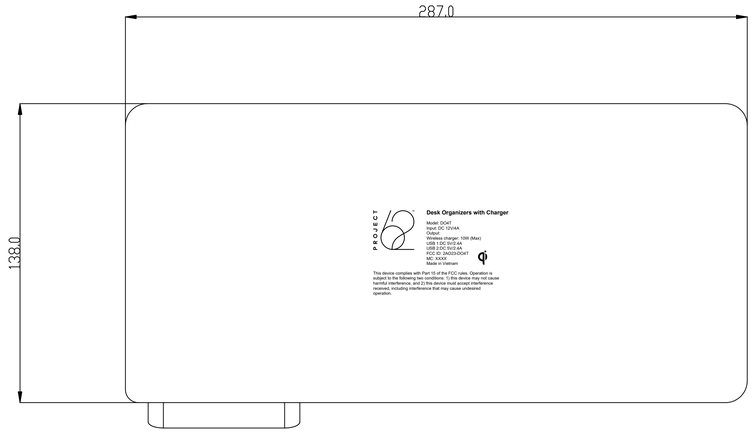
287.0
138.0
PROJECT 62
Desk Organizers with Charger
Model: DG4T
Input: DC 12V/4A
Output:
Wireless charger: 10W (Max)
USB 1:DC 5V2.4A
USB 2:DC 5V2.4A
Model: DG3-DG3-DG4T
MC: M-UK
Made in Vietnam
This device complies with Part 15 of the FCC rules. Operation is subject to the following two conditions: 1) this device may not cause harmful interference, and 2) this device must accept interference received, including interference that may cause undesired operation.

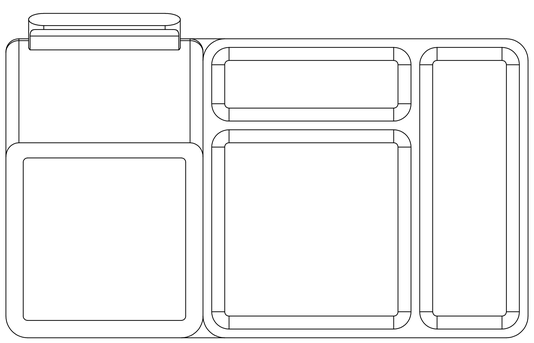

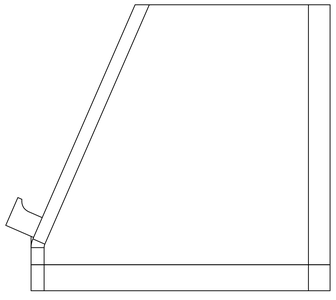

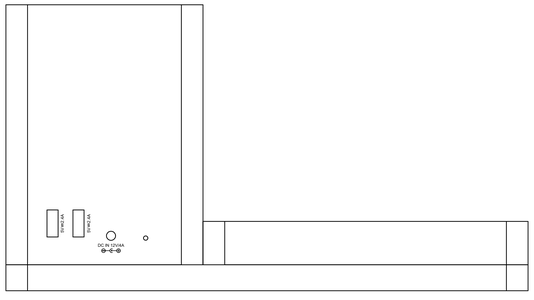
DC IN 12V⎓5A

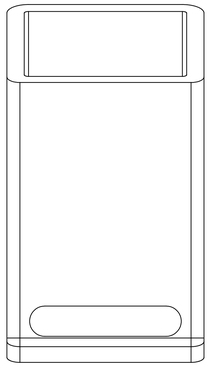

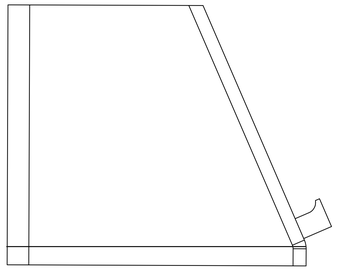

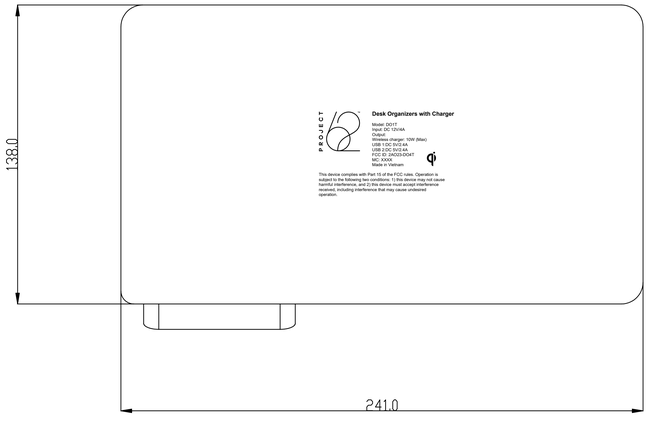
138.0
241.0
PROJECT
Desk Organizers with Charger
Model: D01T
Input: DC 12V⎓5A
Type-C:
Wireless charger: 10W (Max)
USB 1:DC 5V⎓2.4A
USB 2:DC 5V⎓2.4A
FCC ID: 2AHJ5-D01DAT
NC: XXXX
Made in Vietnam
This device complies with Part 15 of the FCC rules. Operation is subject to the following two conditions: 1) this device may not cause harmful interference, and 2) this device must accept interference received, including interference that may cause undesired operation.

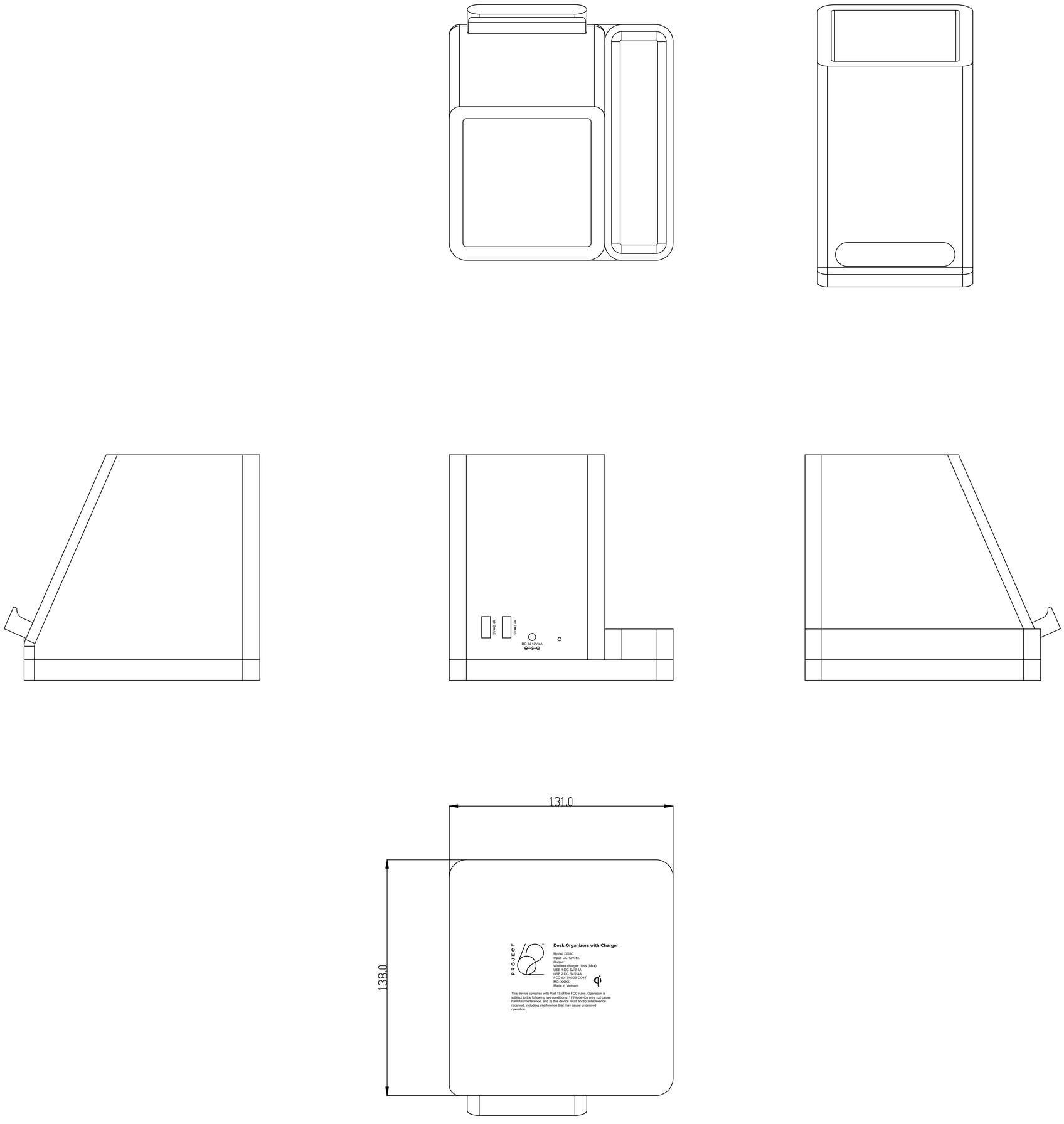
5V⎓2.4A
5V⎓2.1A
DC IN 12V/4A
131.0
138.0
PROJECT
Desk Organizers with Charger
Model: DO3C
Input: DC 12V/4A
Output:
Wireless charger: 10W (Max)
USB 3 DC 5V/2.4A
USB 1 DC 5V/2.1A
FCC ID: 2AJ23-DO4T
MC: XXXX
Made in Vietnam
This device complies with Part 15 of the FCC rules. Operation is subject to the following two conditions: 1) this device may not cause harmful interference, and 2) this device must accept interference received, including interference that may cause undesired operation.