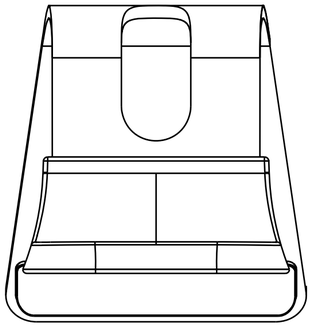

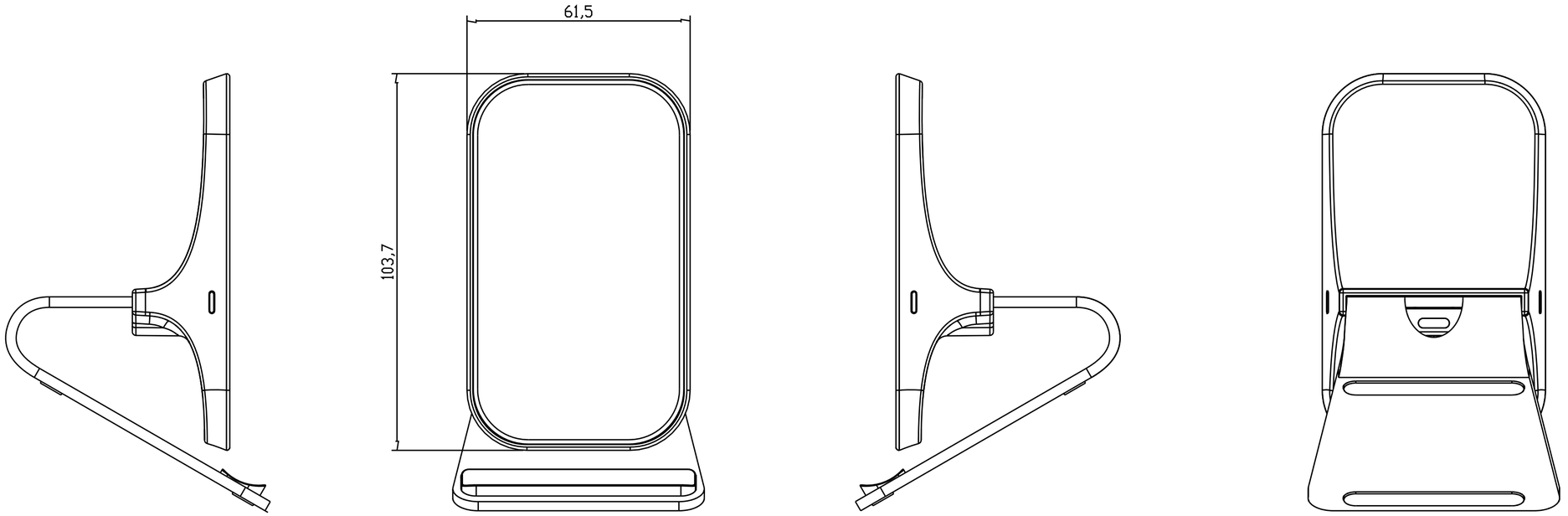
61,5
103,7

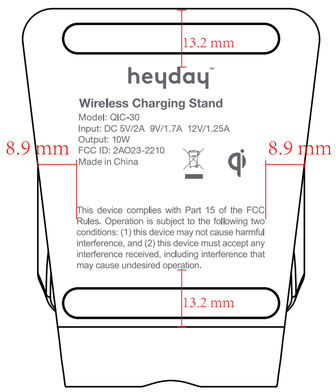
13.2 mm
heyday
Wireless Charging Stand
Model: QIC-30
Input: DC 5V/2A 9V/1.7A 12V/1.25A
Output: 10W
FCC ID: 2AO23-2210
Made in China
8.9 mm
8.9 mm
This device complies with Part 15 of the FCC Rules. Operation is subject to the following two conditions: (1) this device may not cause harmful interference, and (2) this device must accept any interference received, including interference that may cause undesired operation.
13.2 mm