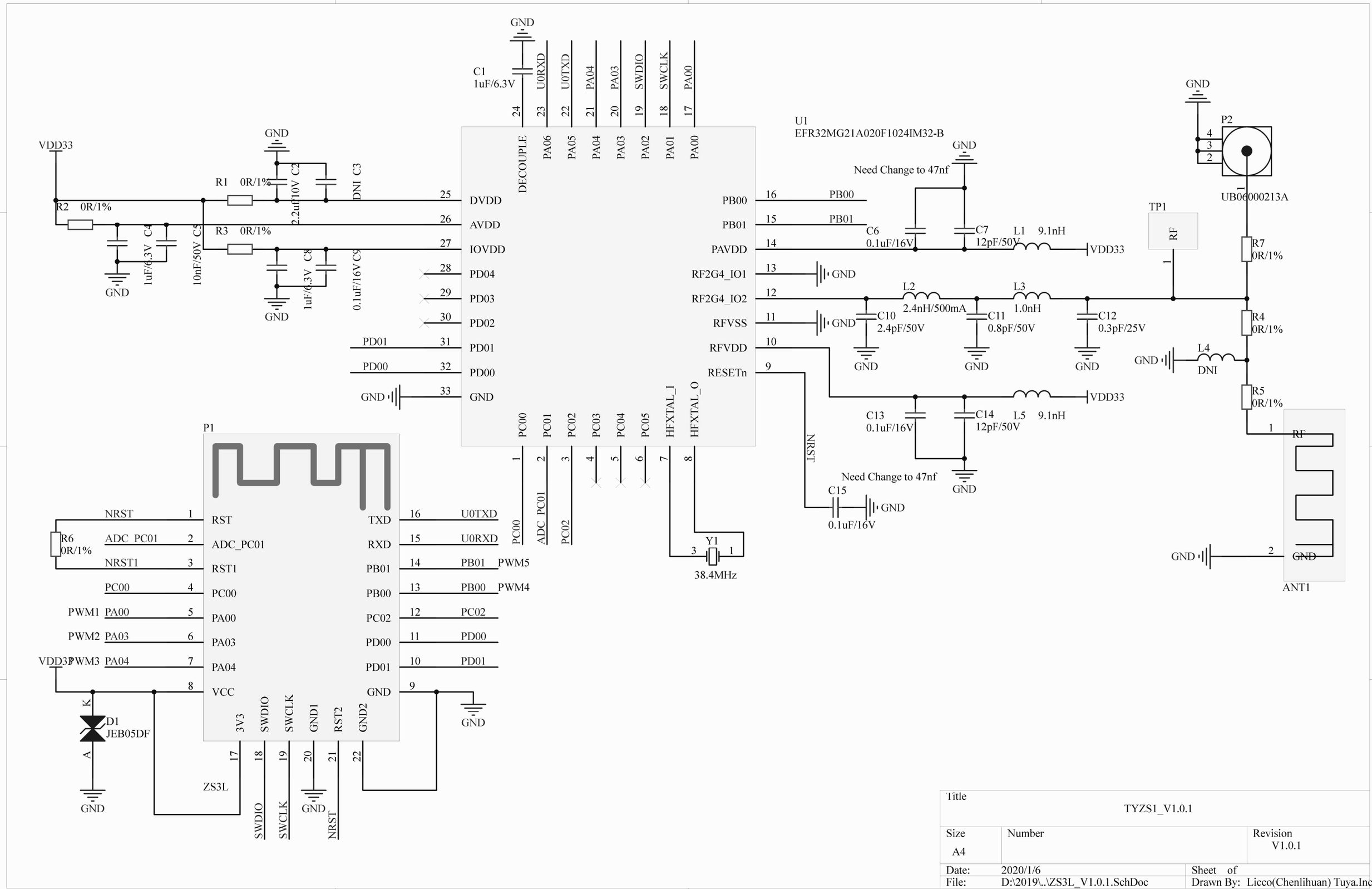

Title		
TYZS1_V1.0.1		
Size A4	Number	Revision V1.0.1
Date: 2020/1/6		Sheet of
File: D:\2019\..\ZS3L_V1.0.1.SchDoc		Drawn By: Licco(Chenlihuan) Tuya.Inc