Product Name:**UD31** Product manager:**Nicky** Product designer:**Tyron** **Date:** 20240527 | **MOMAX LAB** CONFIDENTIAL

Component: Magnetic wireless charging case
Color: PANTONE 10370 C (Qin Metal) Material: Aluminum alloy
Process: sandblasting (150 grit) +oxidation (color)

Component: Rotary shaft 1
Color: PANTONE 10370 C (Qinjin Pi color) Material: Aluminum alloy
Process: sandblasting (150 grit) +oxidation (color)

Component: Wireless charging case for watch
Color: PANTONE 10370 C (Qin Metal) Material Aluminum Alloy
Process sandblasting (150 grit) +oxidation (color)

Component: Original wireless charging module
Color: PANTONE 11-0700TPG (white)

Component: Silicone sheet
Color: PANTON E15-4101 TPG (gray)
Material: Silicone
Process: Cutting+pasting

Component: Wireless charging case for earphones
Color: PANTONE 10370 C (Qin Metal) Material: Aluminum alloy
Process. Sandblasting (150 grit) +oxidation (color)

Component: Rotary shaft 1
Color: PANTONE 10370 C (Qin Metal) Material: Aluminum alloy
Process: sandblasting (150 grit)+oxidation (color)
Display light (white) Type-C port

Component: Original wireless charging module
Color: PANTONE 11-0700TPG (white)

Component: Base silicone sheet
Color: PANTONE 1 5-4101 TPG (gray)
Material: Silicone
Process: Cutting+pasting

Component: Circle Box
Color: PANTONE 10370 C (Qin Metal)
Material Aluminum Alloy
Process: sandblasting (150 grit) +oxidation (color)

Component: Wireless charging case for watch
Color: PANTONE 10370 C (Qin metal color) material. Aluminum alloy
Process: sandblasting (150 grit) +oxidation (color))

Component: Silicone sheet
Color: PANTONE 15-4101 TPG (gray)
Material: Silicone
Craftsmanship. Cutting+pasting

Mobile phone magnetic suction wireless charging back

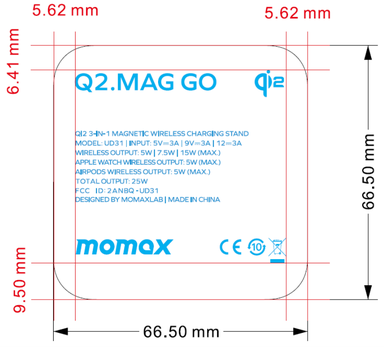

Craftsmanship: Laser engraving
colour: PANTONE WARM GRAY 9C

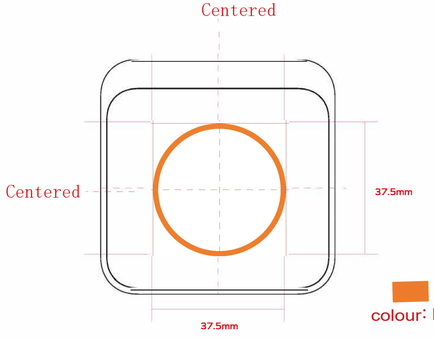

workmanship: Laser carving
colour: PANTONE COOL GRAY 9C