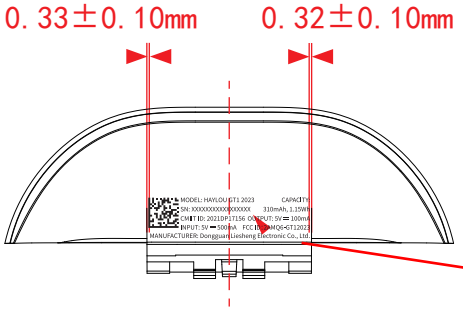
0.33±0.10mm
0.32±0.10mm
MODEL: HAYLOU GT1 2023 CAPACITY:
SN: XXXXXXXXXXXXXXXXXX 310mAh, 1.15Wh
CMIIT ID: 2021DP17156 OUTPUT: 5V ⎓ 100mA
INPUT: 5V ⎓ 500mA FCC ID: 2AMQ6-GT12023
MANUFACTURER: Dongguan Liesheng Electronic Co., Ltd.

MODEL: HAYLOU GT1 2023 CAPACITY:
SN: XXXXXXXXXXXXXXXXXX 310mAh, 1.15Wh
CMIIT ID: 2021DP17156 OUTPUT: 5V ⎓ 100mA
INPUT: 5V ⎓ 500mA FCC ID: 2AMQ6-GT12023
MANUFACTURER: Dongguan Liesheng Electronic Co., Ltd.
4.00*4.00mm
5.582±0.10mm
21.394±0.10mm

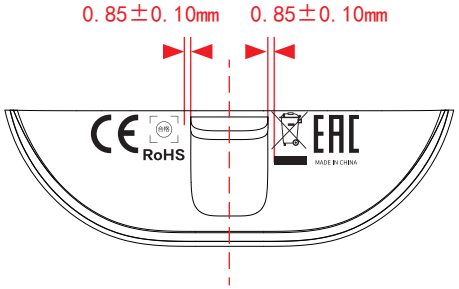

RoHS

MADE IN CHINA