KK-4000 User Manual

1. Overview

KK-4000 is a single chip integrated with 2.4 GHz Wi-Fi and Bluetooth dual mode. Using TSMC (TSMC) ultra low power consumption nanotechnology, it has the best power performance, RF performance, stability, versatility and reliability. It is suitable for various applications and different power consumption requirements.

Table 1: The block diagram of the KK-4000

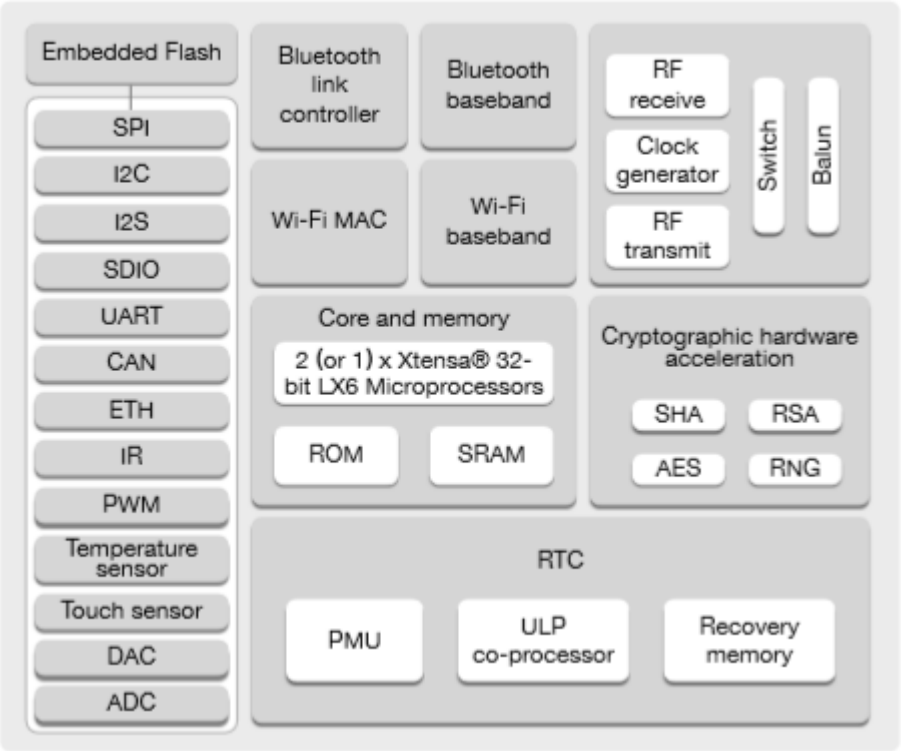

1.1 KK-4000 Specifications

Categories	Items	Specifications
Wi-Fi	Protocols	IEEE 802.11b/g/n (802.11n up to 150 Mbps)
		A-MPDU and A-MSDU aggregation and 0.4 s guard interval support
	Frequency range	2.4GWi-Fi:2412-2462MHz(802.11b/g/n-HT20) 2422-2452MHz(802.11n-HT40)

Bluetooth	Protocols	Bluetooth v4.2 BR/EDR and BLE specification
	Radio	NZIF receiver with -97 dBm sensitivity
		class-2 transmitter
		AFH
	Audio	CVSD and SBC

Categories	Items	Specifications
Hardware	Module interface	SD card, UART, SPI, SDIO, I2C, LED PWM, Motor PWM, I2S, IR
		GPIO, capacitive touch sensor, ADC, DAC
	On-chip sensor	Hall sensor, temperature sensor
	Operating voltage/Power supply	2.7 ~ 3.6V
	Operating current	Average: 80 mA
	Minimum current delivered by power supply	500 mA
	Operating temperature range	-40°C ~ +85°C
	Ambient temperature range	Normal temperature
	Package size	20 mm x 19.4mm x 3mm

1.2 application

- universal low power IoT sensor Hub
- general low power IoT recorder
- Video streaming transmission of camera
- OTT TV box / set-top box equipment
- Music player - network music player - audio streaming media device
- Wi-Fi toys - counter - Toy anti - loss devices
- Wi-Fi speech recognition equipment
- Ear wheat
- Intelligent socket
- family automation
- Mesh network
- Industrial wireless control
- baby monitor
- Wearable electronic products

2. PIN DEFINITIONS

2.1 Dimensions

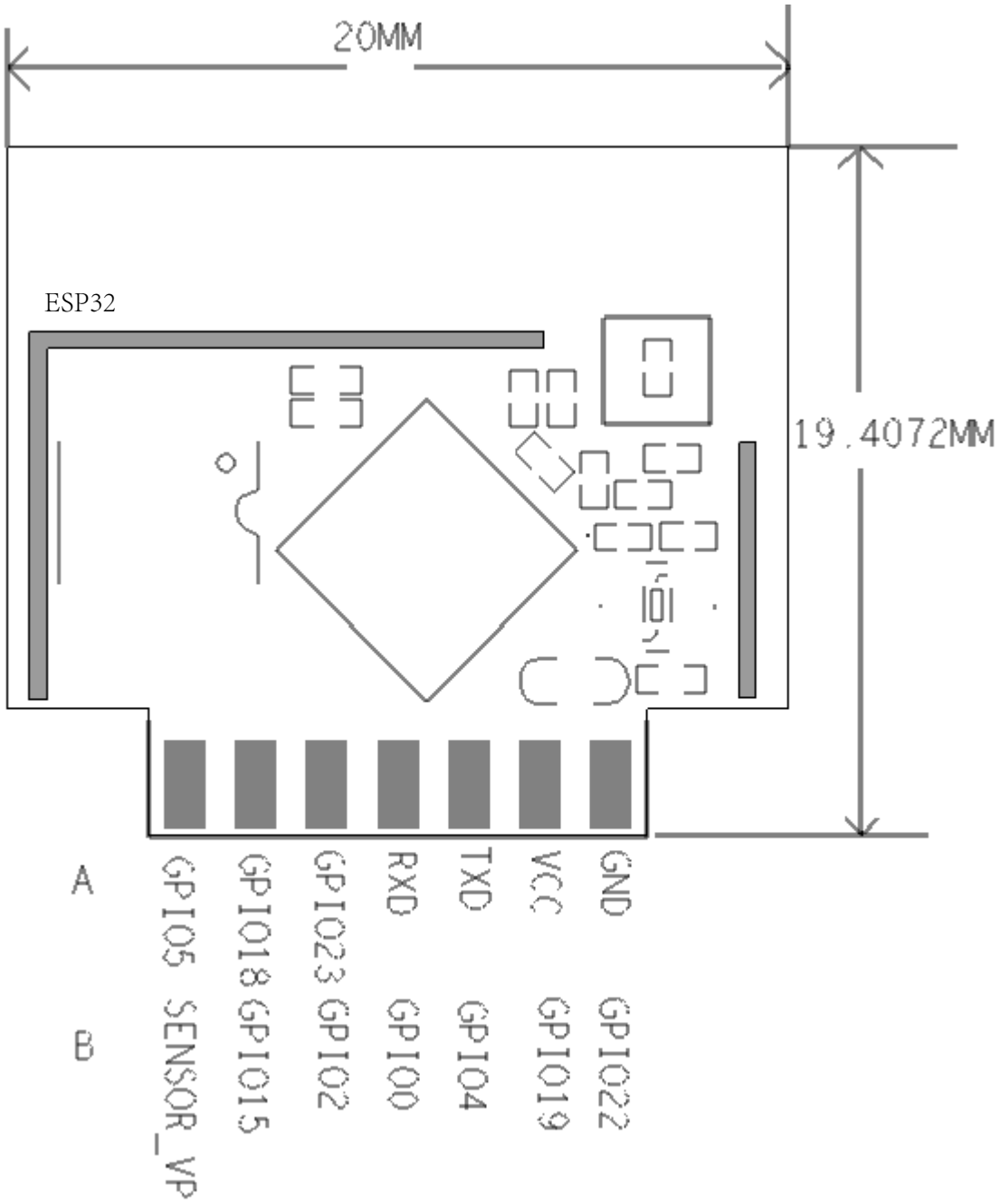

2.2 Pin Description

KK-4000 has 14 pins. See pin definitions in Table 2.

Table 2: Pin Definitions

Name	No.	Function
GND_POWER	A1	Power pipe foot, grounding
VDD_33	A2	Power pipe pin, 3.3V voltage input
UTXD	A3	GPIO1、U0TXD、CLK_OUT3、EMAC_RXD2
URXD	A4	GPIO3、U0RXD、CLK_OUT2
GPIO23	A5	GPIO23、VSPID、HS1_STROB
GPIO18	A6	GPIO18、VSPICLK、HS1_DATA7
GPIO5	A7	GPIO5、VSPICS0、HS1_DATA6、EMAC_RX_CL
GPIO22	B1	GPIO22、VSPIWP、U0RTS、EMAC_TXD1
GPIO19	B2	GPIO19、VSPIQ、U0CTS、EMAC_TXD
GPIO4	B3	GPIO4、ADC2_CH0、TOUCH0、RTC_GPIO10、HSPIHD、HS2_DATA1、SD_DATA1、EMAC_TX_ER
GPIO0	B4	GPIO0、ADC2_CH1、TOUCH1、RTC_GPIO11、CLK_OUT1、EMAC_TX_CLK
GPIO2	B5	GPIO2、ADC2_CH2、TOUCH2、RTC_GPIO12、HSPIWP、HS2_DATA0、SD_DATA0
GPIO15	B6	General GPIO pin
SEBNSOR_VP	B7	GPIO39、ADC1_CH3、ADC_PRE_AMP、RTC_GPIO3

3. Electrical Characteristics

Note:
The specifications in this chapter have been tested under the following general condition: VDD = 3.3V, T_A = 27°C, unless otherwise specified.

3.1 Absolute Maximum Ratings

Table 3: Absolute Maximum Ratings

Parameter	Symbol	Min	Typ	Max	Unit
Power supply	VDD	2.7	3.3	3.6	V
Minimum current delivered by power supply	I_{VDD}	0.5	-	-	A
Input low voltage	V_{IL}	-0.3	-	$0.25\times V_{IO}$ [1]	V
Input high voltage	V_{IH}	$0.75\times V_{IO}$ [1]	-	V_{IO} [1] +0.3	V
Input leakage current	I_{IL}	-	-	50	nA
Input pin capacitance	C_{pad}	-	-	2	pF
Output low voltage	V_{OL}	-	-	$0.1\times V_{IO}$ [1]	V
Output high voltage	V_{OH}	$0.8\times V_{IO}$ [1]	-	-	V
Maximum output drive capability	I_{MAX}	-	-	40	mA
Storage temperature range	T_{STR}	-40	-	85	°C
Operating temperature range	T_{OPR}	-40	-	85	°C

3.2 Wi-Fi Radio

Table 4: Wi-Fi Radio Characteristics

Description	Min	Typical	Max	Unit
Input frequency	2412	-	2462	MHz
Input reflection	-	-	-10	dB
Tx power				
Output power of PA for 11b mode	18.32	18.98	19.03	dBm
Sensitivity				
DSSS, 1 Mbps	-	-98	-	dBm
CCK, 11 Mbps	-	-91	-	dBm
OFDM, 6 Mbps	-	-93	-	dBm
OFDM, 54 Mbps	-	-75	-	dBm
HT20, MCS0	-	-93	-	dBm
HT20, MCS7	-	-73	-	dBm

Description	Min	Typical	Max	Unit
HT40, MCS0	-	-90	-	dBm
HT40, MCS7	-	-70	-	dBm
MCS32	-	-89	-	dBm
Adjacent channel rejection				
OFDM, 6 Mbps	-	37	-	dB
OFDM, 54 Mbps	-	21	-	dB
HT20, MCS0	-	37	-	dB
HT20, MCS7	-	20	-	dB

3.3 BLE Radio

3.3.1 Receiver

Table 6: Receiver Characteristics — BLE

Parameter	Conditions	Min	Typ	Max	Unit
Sensitivity @30.8% PER	-	-	-97	-	dBm
Maximum received signal @30.8% PER	-	0	-	-	dBm
Co-channel C/I	-	-	+10	-	dB
Adjacent channel selectivity C/I	F = F0 + 1 MHz	-	-5	-	dB
	F = F0 - 1 MHz	-	-5	-	dB
	F = F0 + 2 MHz	-	-25	-	dB
	F = F0 - 2 MHz	-	-35	-	dB
	F = F0 + 3 MHz	-	-25	-	dB
	F = F0 - 3 MHz	-	-45	-	dB
Out-of-band blocking performance	30 MHz ~ 2000 MHz	-10	-	-	dBm
	2000 MHz ~ 2400 MHz	-27	-	-	dBm
	2500 MHz ~ 3000 MHz	-27	-	-	dBm
	3000 MHz ~ 12.5 GHz	-10	-	-	dBm
Intermodulation	-	-36	-	-	dBm

3.3.2 Transmitter

Table 7: Transmitter Characteristics — BLE

Parameter	Conditions	Min	Typ	Max	Unit
RF transmit power	-	-	0	-	dBm
RF power control range	-	-1	-	+1	dBm

Parameter	Conditions	Min	Typ	Max	Unit
Adjacent channel transmit power	F = F0 + 1 MHz	-	-14.6	-	dBm
	F = F0 - 1 MHz	-	-12.7	-	dBm
	F = F0 + 2 MHz	-	-44.3	-	dBm
	F = F0 - 2 MHz	-	-38.7	-	dBm
	F = F0 + 3 MHz	-	-49.2	-	dBm
	F = F0 - 3 MHz	-	-44.7	-	dBm
	F = F0 + > 3 MHz	-	-50	-	dBm
	F = F0 - > 3 MHz	-	-50	-	dBm
$\Delta f1_{avg}$	-	-	-	265	kHz
$\Delta f2_{max}$	-	247	-	-	kHz
$\Delta f2_{avg}/\Delta f1_{avg}$	-	-	-0.92	-	-
ICFT	-	-	-10	-	kHz
Drift rate	-	-	0.7	-	kHz/50 s
Drift	-	-	2	-	kHz

3.4 Bluetooth Radio

3.4.1 Receiver (BDR)

Table 7: Receiver Characteristics — BDR

Parameter	Conditions	Min	Typ	Max	Unit
Sensitivity @0.1% PER	-	-	-94	-	dBm
Maximum received signal @30.8% PER	-	0	-	-	dBm
Co-channel C/I	-	-	+17	-	dB
Adjacent channel selectivity C/I	F = F0 + 1 MHz	-	-	- 6	dB
	F = F0 - 1 MHz	-	-	-6	dB
	F = F0 + 2 MHz	-	-	-25	dB
	F = F0 - 2 MHz	-	-	- 33	dB
	F = F0 + 3 MHz	-	-	-25	dB
	F = F0 - 3 MHz	-	-	- 45	dB
Out-of-band blocking performance	30 MHz ~ 2000 MHz	-10	-	-	dBm
	2000 MHz ~ 2400 MHz	-27	-	-	dBm
	2500 MHz ~ 3000 MHz	-27	-	-	dBm
	3000 MHz ~ 12.5 GHz	-10	-	-	dBm
Intermodulation	-	-36	-	-	dBm

3.4.2 Receiver (EDR)

Table 7: Receiver Characteristics — EDR(π/4 DPSK)

Parameter	Conditions	Min	Typ	Max	Unit
Sensitivity @0.1% PER	-	-	-90	-	dBm
Maximum received signal @30.8% PER	-	0	0	-	dBm
Co-channel C/I	-	-	+11	-	dB
Adjacent channel selectivity C/I	F = F0 + 1 MHz	-	-7	-	dB
	F = F0 - 1 MHz	-	-7	-	dB
	F = F0 + 2 MHz	-	-25	-	dB
	F = F0 - 2 MHz	-	-35	-	dB
	F = F0 + 3 MHz	-	-25	-	dB
	F = F0 - 3 MHz	-	-45	-	dB
Out-of-band blocking performance	30 MHz ~ 2000 MHz	-	-	-	dBm
	2000 MHz ~ 2400 MHz	-	-	-	dBm
	2500 MHz ~ 3000 MHz	-	-	-	dBm
	3000 MHz ~ 12.5 GHz	-	-	-	dBm
Intermodulation	-	-	-	-	dBm

Table 8: Receiver Characteristics — EDR(8 DPSK)

Parameter	Conditions	Min	Typ	Max	Unit
Sensitivity @0.1% PER	-	-	-84	-	dBm
Maximum received signal @30.8% PER	-	0	5	-	dBm
Co-channel C/I	-	-	+18	-	dB
Adjacent channel selectivity C/I	F = F0 + 1 MHz	-	2	-	dB
	F = F0 - 1 MHz	-	2	-	dB
	F = F0 + 2 MHz	-	-25	-	dB
	F = F0 - 2 MHz	-	-25	-	dB
	F = F0 + 3 MHz	-	-25	-	dB
	F = F0 - 3 MHz	-	-38	-	dB
Out-of-band blocking performance	30 MHz ~ 2000 MHz	-	-	-	dBm
	2000 MHz ~ 2400 MHz	-	-	-	dBm
	2500 MHz ~ 3000 MHz	-	-	-	dBm
	3000 MHz ~ 12.5 GHz	-	-	-	dBm
Intermodulation	-	-	-	-	dBm

3.4.3 Transmitter

Table 9: Transmitter Characteristics — BDR

Parameter	Conditions	Min	Typ	Max	Unit
RF transmit power	-	-	-1.61	-	dBm
RF power control range	-	-1.81	-	-1.39	dBm

Parameter	Conditions	Min	Typ	Max	Unit
Adjacent channel transmit power	F = F0 + 1 MHz	-	-24	-	dBm
	F = F0 - 1 MHz	-	-16.1	-	dBm
	F = F0 + 2 MHz	-	-40.8	-	dBm
	F = F0 - 2 MHz	-	-35.6	-	dBm
	F = F0 + 3 MHz	-	-45.7	-	dBm
	F = F0 - 3 MHz	-	-40.2	-	dBm
	F = F0 + > 3 MHz	-	45.6	-	dBm
	F = F0 - > 3 MHz	-	45.6	-	dBm
Δf_1avg	-	-	-	155	kHz
Δf_2max	-	133.7	-	-	kHz
Δf_2avg/Δf_1avg	-	-	0.92	-	-
ICFT	-	-	-7	-	kHz
Drift rate	-	-	0.7	-	kHz/50 s
Drift	-	-	6	-	kHz

Table 10: Transmitter Characteristics — EDR

Parameter	Conditions	Min	Typ	Max	Unit
RF transmit power	-	-	-0.02	-	dBm
Gain controll step	-	-	-	-	dBm
RF power control range	-	-0.48	-	0.49	dBm

Parameter		Min	Typ	Max	Unit
π/4 DQPSK max w0		-	-0.72	-	kHz
π/4 DQPSK max wi		-	-6	-	kHz
π/4 DQPSK max (wi+w0)		-	-7.42	-	kHz
8DPSK max w0		-	0.7	-	kHz
8DPSK max wi		-	-9.6	-	kHz
8DPSK max (wi+w0)		-	-10	-	kHz
π/4 DQPSK modulation accuracy	RMS DEVM	-	4.28	-	%
	99% DEVM	-	-	30	%
	Peak DEVM	-	13.3	-	%
8DPSK modulation accuracy	RMS DEVM	-	5.8	-	%
	99% DEVM	-	-	20	%
	Peak DEVM	-	14	-	%
In-band spurious emissions	F = F0 + 1MHz	-	-34	-	dBm
	F = F0 − 1MHz	-	-40.2	-	dBm
	F = F0 + 2MHz	-	-34	155	dBm
	F = F0 − 2MHz	-	- 36	-	dBm
	F = F0 + 3MHz	-	-38		dBm
	F = F0 − 3MHz	-	-40.3	-	dBm
	F = F0 ± >3MHz	-	-	- 41.5	dBm
EDR differential phase coding		-	100	-	%

4. Functional Description

This chapter describes the modules and functions integrated in KK-4000

4.1 CPU and Internal Memory

KK-4000 contains two low-power Xtensa® 32-bit LX6 microprocessors. The internal memory includes:

- 448 kB of ROM for booting and core functions.

- 520 kB (8 kB RTC FAST Memory included) of on-chip SRAM for data and instruction.
  - 8 kB of SRAM in RTC, which is called RTC FAST Memory and can be used for data storage; it is accessed by the main CPU during RTC Boot from the Deep-sleep mode.
- 8 kB of SRAM in RTC, which is called RTC SLOW Memory and can be accessed by the co-processor during the Deep-sleep mode.
- 1 kbit of eFuse, of which 320 bits are used for the system (MAC address and chip configuration) and the remaining 704 bits are reserved for customer applications, including Flash-Encryption and Chip-ID.

4.2 External Flash and SRAM

KK-4000 supports up to four 16-MB of external QSPI flash and SRAM with hardware encryption based on AES to protect developers' programs and data.

KK-4000 can access the external QSPI flash and SRAM through high-speed caches.

- Up to 16 MB of external flash are memory-mapped onto the CPU code space, supporting 8, 16 and 32-bit access. Code execution is supported.
- Up to 8 MB of external flash/SRAM are memory-mapped onto the CPU data space, supporting 8, 16 and 32-KK-4000bit access. Data-read is supported on the flash and SRAM. Data-write is supported on the SRAM.

integrates 4 MB of external SPI flash. The 4-MB SPI flash can be memory-mapped onto the CPU code space, supporting 8, 16 and 32-bit access. Code execution is supported.

4.3 Crystal Oscillators

The KK-4000 Wi-Fi/BT firmware can only support 40 MHz crystal oscillator for now.

FCC Statement

Any Changes or modifications not expressly approved by the party responsible for compliance could void the user's authority to operate the equipment.

This device complies with part 15 of the FCC Rules. Operation is subject to the following two conditions:

(1) This device may not cause harmful interference, and

(2) This device must accept any interference received, including interference that may cause undesired operation.

FCC Radiation Exposure Statement:

This equipment complies with FCC radiation exposure limits set forth for an uncontrolled environment .This equipment should be installed and operated with minimum distance 20cm between the radiator& your body.

ISED RSS Warning/ISED RF Exposure Statement

ISED RSS Warning:

This device complies with Innovation, Science and Economic Development Canada licence-exempt RSS standard(s). Operation is subject to the following two conditions: (1) this device may not cause interference, and (2) this device must accept any interference, including interference that may cause undesired operation of the device.

Le présent appareil est conforme aux CNR d'ISED applicables aux appareils radio exempts de licence. L'exploitation est autorisée aux deux conditions suivantes: (1) l'appareil ne doit pas produire de brouillage, et (2) l'utilisateur de l'appareil doit accepter tout brouillage radioélectrique subi, même si le brouillage est susceptible d'en compromettre le fonctionnement.

ISED RF exposure statement:

This equipment complies with ISED radiation exposure limits set forth for an uncontrolled environment. This equipment should be installed and operated with minimum distance 20cm between the radiator& your body.This transmitter must not be co-located or operating in conjunction with any other antenna or transmitter.

Le rayonnement de la classe b repecte ISED fixaient un environnement non contrôlés.Installation et mise en œuvre de ce matériel devrait avec échangeur distance minimale entre 20 cm ton corps.Lanceurs ou ne peuvent pas coexister cette antenne ou capteurs avec d'autres.

FCC & ISED Label Instructions

The outside of final products that contains this module device must display a label referring to the enclosed module. This exterior label can use wording such as: "Contains Transmitter Module FCC ID: 2AMI2-KK4000,IC:22853-KK4000" or "Contains FCC ID: 2AMI2-KK4000,IC:22853-KK4000" Any similar wording that expresses the same meaning may be used.