此底喥稿已經本人批核
签名:_____

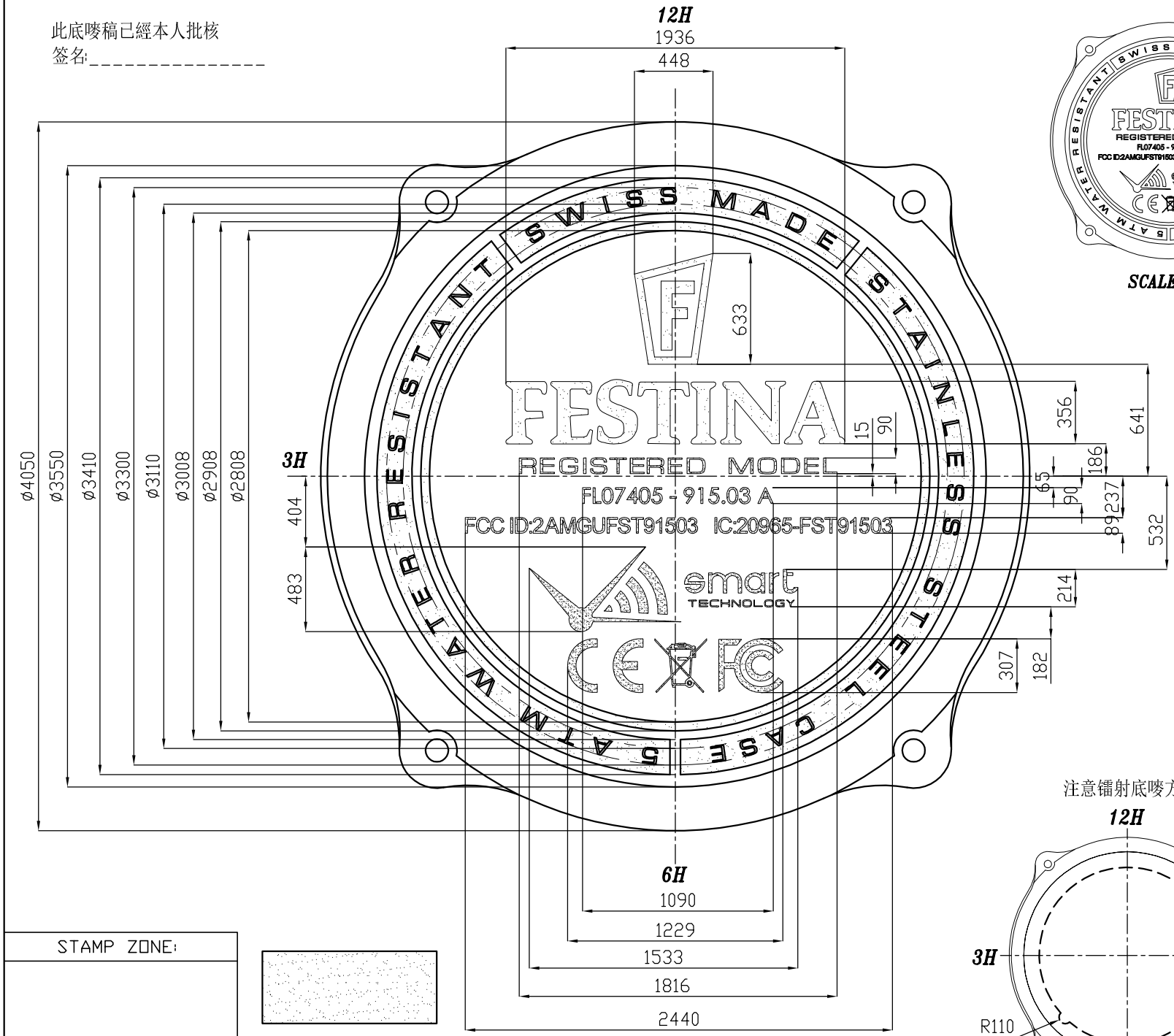

SCALE 1:1

注意镭射底喥方向

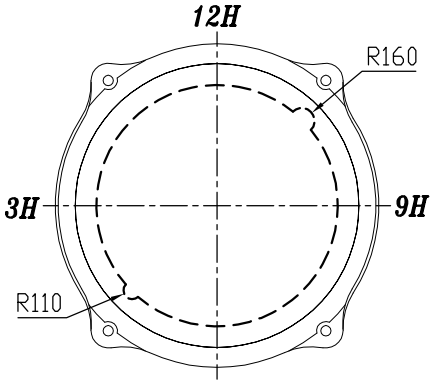

SCALE 1:1

STAMP ZONE:

BY LASER

REMARKS :

REV.	DESCRIPTION
1	
2	
3	
4	
5	

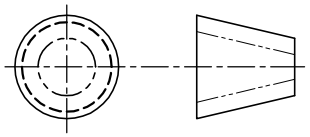

GENERAL TOLERANCES			±5
SCALE :	3 : 1	REV.	A/0
UNITS :	1 = 0.01mm		
DATE :	2016-09-16		
DRAWING No.	FLY7405/FC1P15-B00		
DRAWN BY	M N		
PREPARED BY			
CHECKED BY			
APPROVED BY			
PARTS NAME	BACK MARKING		
PARTS CODE	FLY7405/FC1P15		
MATERIAL	RUBBER		
MODEL No.	FLY7405/FC1		

LOTARY LTD.