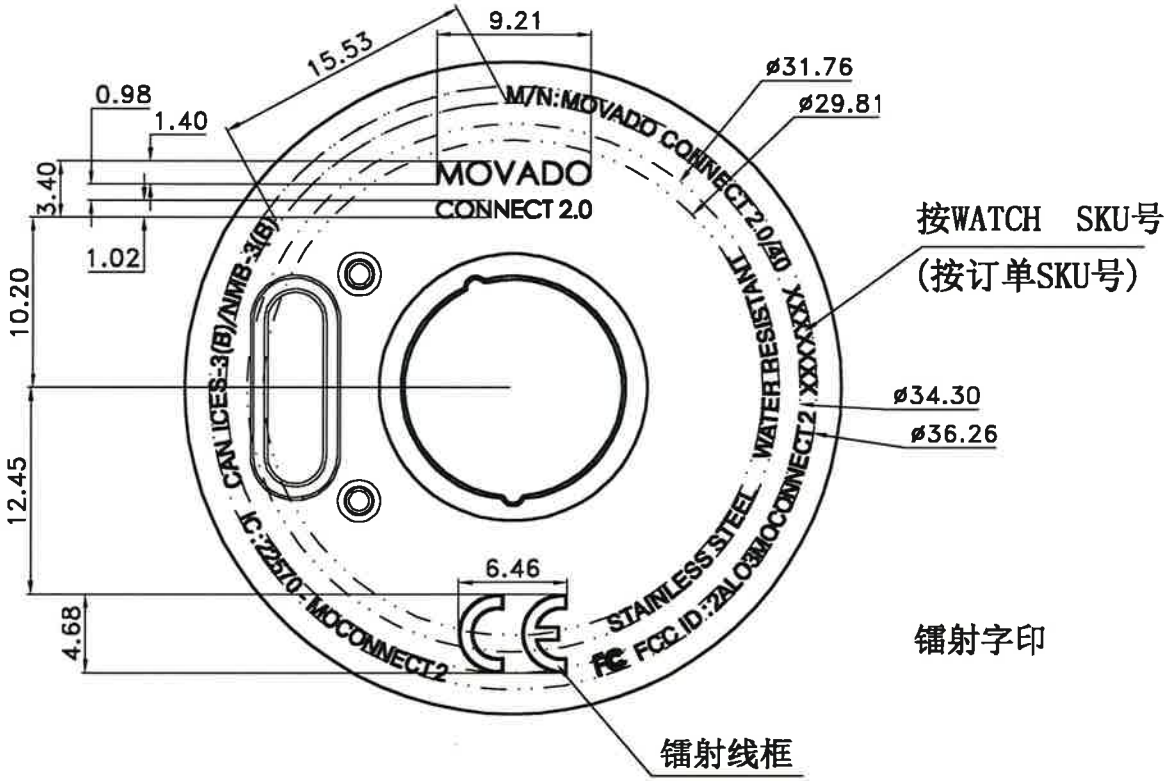

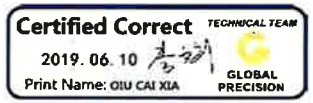

WATCH SKU	CASE SKU	CASE TECH REF	CASEBACK COLOR
3660022	760606519	MB-01-1-14-6519	BLACK
3660023	760606520	MB-01-1-34-6520	BLACK
3660024	760606521	MB-01-1-34-6521	BLACK

CUSTOMER/NO.	MB216.1	DRAWING NO	S3160MB-14	MOVEMENT	XXX	VIEW		MARK	DATE	DESCRIPTION APPRO	SIGN
GLOBAL PRECISION		VENDOR CODE	S3160MB	GEN. Tol	±0.10 Angle ±0.05°	DATE	04/12-18	1			
		PARTS NAME	BACK OUTSIDE MARKING	UNITS	1=1MM	DRAWN BY	LIU	2			
		MATERIAL		WATER PROOF	IPX8	CHECKED BY		3			
		EDITION	A0	SCALE	2.5/1	APPROVED BY		4			

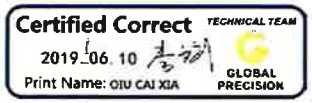

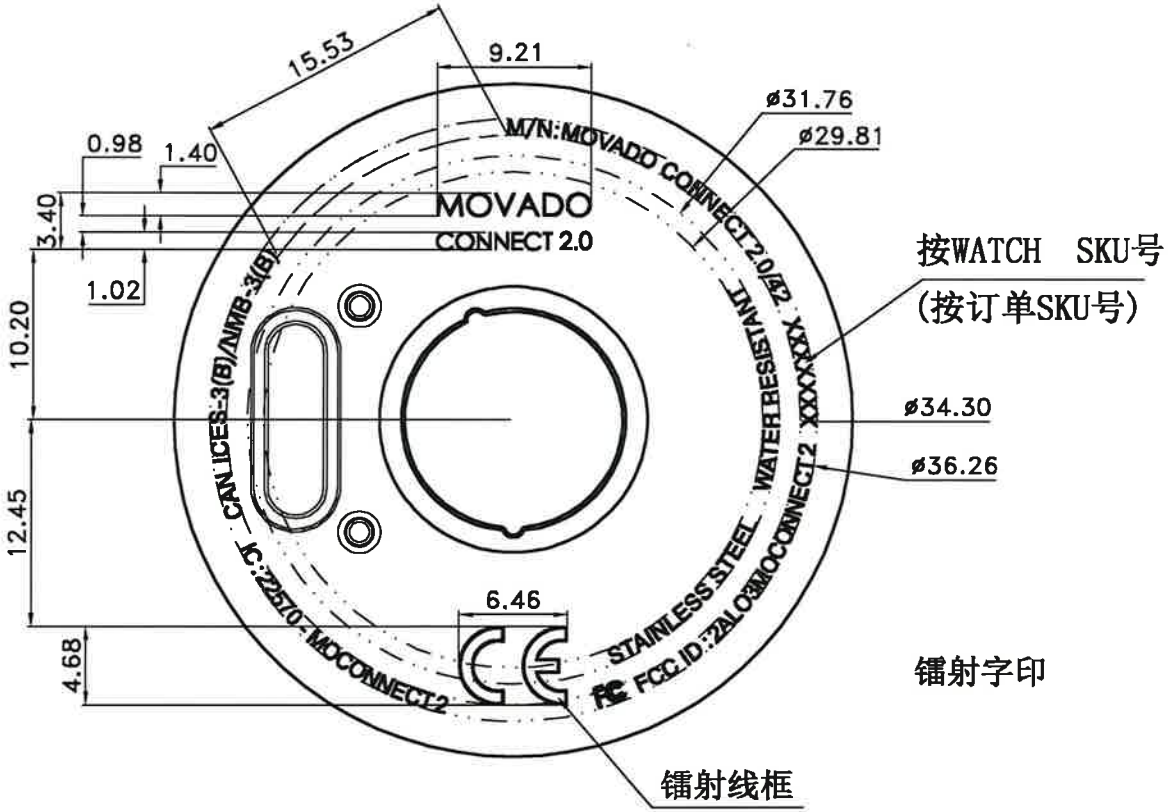

WATCH SKU	CASE SKU	CASE TECH REF	CASEBACK COLOR
3660028	760606525	MB-01-1-14-6525	BLACK
3660029	760606526	MB-01-1-34-6526	BLACK

CUSTOMER/NO.	MB220.1	DRAWING NO	S3160MC-14	MOVEMENT	XXX	VIEW		MARK	DATE	DESCRIPTION APPRO	SIGN
GLOBAL PRECISION		VENDOR CODE	S3160MC	GEN. Tol	±0.10 Angle ±0.05°	DATE	04/12-18	1			
		PARTS NAME	BACK OUTSIDE MARKING	UNITS	1=1MM	DRAWN BY	LIU	2			
		MATERIAL		WATER PROOF	IPX8	CHECKED BY		3			
		EDITION	A0	SCALE	2.5/1	APPROVED BY		4			