TCT 通测检测
TESTING CENTRE TECHNOLOGY

TEST REPORT

FCC ID: 2AKSAMOBULAA-S

Product: Mobile phone

Model No.: S1

Additional Model No.: Please refer to page 5

Trade Mark: MOBULAA

Report No.: TCT190614E037

Issued Date: Oct. 15, 2019

Issued for:

Shenzhen YLWD Technology Co., Ltd

RM1002.A.Haisong BLD.RD, Tairan. FuTian District, Shenzhen, China

Issued By:

Shenzhen Tongce Testing Lab.

1B/F., Building 1, Yibaolai Industrial Park, Qiaotou, Fuyong, Baoan District, Shenzhen, Guangdong, China

TEL: +86-755-27673339

FAX: +86-755-27673332

TABLE OF CONTENTS

1. Test Certification

Product:	Mobile phone
Model No.:	S1
Additional Model:	Please refer to page 5
Trade Mark:	**MOBULAA**
Applicant:	Shenzhen YLWD Technology Co., Ltd
Address:	RM1002.A.Haisong BLD.RD, Tairan. FuTian District, Shenzhen, China
Manufacturer:	Shenzhen YLWD Technology Co., Ltd
Address:	RM1002.A.Haisong BLD.RD, Tairan. FuTian District, Shenzhen, China
Date of Test:	Jun. 17, 2019 – Oct. 14, 2019
Applicable Standards:	FCC CFR Title 47 Part 2 FCC CFR Title 47 Part22 FCC CFR Title 47 Part24 FCC CFR Title 47 Part27

The above equipment has been tested by Shenzhen Tongce Testing Lab. and found compliance with the requirements set forth in the technical standards mentioned above. The results of testing in this report apply only to the product/system, which was tested. Other similar equipment will not necessarily produce the same results due to production tolerance and measurement uncertainties.

Tested By:	Brews Xu	***Date:***	***Oct. 14, 2019***
	Brews Xu		
Reviewed By:	Beryl Zhao	***Date:***	***Oct. 15, 2019***
	Beryl Zhao		
Approved By:	Tomsin	***Date:***	***Oct. 15, 2019***
	Tomsin		

2. Test Result Summary

Requirement	CFR 47 Section	Result
Conducted Output Power	§2.1046; §22.913; §24.232(c); §27.50(d); §27.50(c); §27.50(b);	PASS
Peak-to-Average Ratio	§2.1046; §24.232(d) §27.50(d); §27.50(c); §27.50(b);	PASS
Effective Radiated Power	§2.1046; §22.913; §24.232(c); §27.50(d); §27.50(c); §27.50(b);	PASS
Equivalent Isotropic Radiated Power	§2.1046; §22.913; §24.232(c); §27.50(d); §27.50(c); §27.50(b);	PASS
Occupied Bandwidth	§2.1049; §24.238(b); §27.53;	PASS
Band Edge	§2.1051; §22.917(a); §27.53(h); §27.53(c); §27.53(g); §24.238(a);	PASS
Conducted Spurious Emission	§2.1051; §22.917(a); §27.53(h); §27.53(g); §27.53(c); §24.238(a);	PASS
Field Strength of Spurious Radiation	§2.1053; §22.917(a); §27.53(g) ; §27.53(c); §27.53(h); §24.238(a);	PASS
Frequency Stability for Temperature & Voltage	§2.1055;§22.355; §27.54; §24.235;	PASS

Note:

1. PASS: Test item meets the requirement.

2. Fail: Test item does not meet the requirement.

3. N/A: Test case does not apply to the test object.

4. The test result judgment is decided by the limit of test standard.

Hotline: 400-6611-140 Tel: 86-755-27673339 Fax: 86-755-27673332 http://www.tct-lab.com

3. EUT Description

Product Name:	Mobile phone
Model :	S1
Additional Model:	S2, S3, S4, S5, S6, S7, S8, S9, S10, S11, S12, S13, S14, S15, S16, S17, S18, S19, S20, T4001, T4002, T4003, T4004, T4005, T4501, T4502, T4503, T4504, T4505, T5001, T5002, T5003, T5004, T5005, T5501, T5502, T5503, T5504, T5505, T6001, T6002, T6003, T6004, T6005, F4001, F4002, F4003, F4004, F4005, F4501, F4502, F4503, F4504, F4505, F5001, F5002, F5003, F5004, F5005, F5501, F5502, F5503, F5504, F5505, F6001, F6002, F6003, F6004, F6005, K4001, K4002, K4003, K4004, K4005, K4501, K4502, K4503, K4504, K4505, K5001, K5002, K5003, K5004, K5005, K5501, K5502, K5503, K5504, K5505, K6001, K6002, K6003, K6004, K6005, A4001, A4002, A4003, A4004, A4005, A4501, A4502, A4503, A4504, A4505, A5001, A5002, A5003, A5004, A5005, A5501, A5502, A5503, A5504, A5505, A6001, A6002, A6003, A6004, A6005, E4001, E4002, E4003, E4004, E4005, E4501, E4502, E4503, E4504, E4505, E5001, E5002, E5003, E5004, E5005, E5501, E5502, E5503, E5504, E5505, E6001, E6002, E6003, E6004, E6005, K1, K2, K3, K4, K5, K6, K7, K8, K9, K10
Trade Mark:	**MOBULAA**
Tx Frequency:	LTE Band 2: 1850 MHz ~ 1910 MHz LTE Band 4: 1710 MHz ~ 1755 MHz LTE Band 5: 824 MHz ~ 849 MHz LTE Band 7: 2500 MHz ~ 2570 MHz LTE Band 12: 699 MHz ~ 716 MHz LTE Band 13: 777 MHz ~ 787 MHz LTE Band 17: 704 MHz ~ 716 MHz LTE Band 25: 1850 MHz ~ 1915 MHz LTE Band 41: 2555 MHz ~ 2655 MHz
Rx Frequency:	LTE Band 2: 1930MHz ~ 1990 MHz LTE Band 4: 2110 MHz ~ 2155 MHz LTE Band 5: 869 MHz ~ 894 MHz LTE Band 7: 2620 MHz ~ 2690 MHz LTE Band 12: 729 MHz ~ 746 MHz LTE Band 13: 746MHz ~ 756 MHz LTE Band 17: 734 MHz ~ 746 MHz LTE Band 25: 1930MHz ~ 1995 MHz LTE Band 41: 2555 MHz ~ 2655 MHz
Bandwidth:	LTE Band 2: 1.4MHz /3MHz /5MHz /10MHz /15MHz /20MHz

	LTE Band 4: 1.4MHz /3MHz /5MHz /10MHz /15MHz /20MHz LTE Band 5: 1.4MHz /3MHz /5MHz /10MHz LTE Band 7: 5MHz /10MHz/15MHz /20MHz LTE Band 12: 1.4MHz /3MHz /5MHz /10MHz LTE Band 13: 5MHz /10MHz LTE Band 17: 5MHz /10MHz LTE Band 25: 1.4MHz /3MHz /5MHz /10MHz /15MHz /20MHz LTE Band 41: 5MHz /10MHz /15MHz /20MHz
Maximum Output Power to Antenna:	LTE Band 2: 23.27dBm LTE Band 4: 23.55dBm LTE Band 5: 23.51dBm LTE Band 7: 23.14dBm LTE Band 12: 23.61dBm LTE Band 13: 23.49dBm LTE Band 17: 23.62dBm LTE Band 25: 23.81dBm LTE Band 41: 23.46dBm
99% Occupied Bandwidth:	LTE Band 2: 17M9G7D LTE Band 13: 8M95G7D LTE Band 4: 17M9G7D LTE Band 17: 8M93G7D LTE Band 5: 8M96G7D LTE Band 25: 17M9G7D LTE Band 7: 17M9G7D LTE Band 41: 17M9G7D LTE Band 12: 8M97G7D
Type of Modulation:	QPSK/16QAM
Antenna Type:	Internal Antenna
Antenna Gain:	LTE Band 2: 0.6dBi LTE Band 13: -1.4dBi LTE Band 4: 0.5dBi LTE Band 17: -1.4dBi LTE Band 5: -1.5dBi LTE Band 25: 0.6dBi LTE Band 7: 0.7dBi LTE Band 41: 0.8dBi LTE Band 12: -1.4dBi
Power Supply:	Rechargeable Li-ion Battery DC 3.7V
AC adapter:	Adapter Information: INPUT: AC 100-240V, 50/60Hz, 0.2A OUTPUT: DC 5.0V, 1000mA
Remark:	All models above are identical in interior structure, electrical circuits and components, and just model names are different for the marketing requirement.

Hotline: 400-6611-140 Tel: 86-755-27673339 Fax: 86-755-27673332 http://www.tct-lab.com

Emission Designator

LTE Band 2	QPSK		16QAM	
BW(MHz)	Emission Designator (99%OBW)	Maximum EIRP(W)	Emission Designator (99%OBW)	Maximum EIRP(W)
1.4	1M08G7D	0.236	1M08W7D	0.196
3	2M68G7D	0.239	2M68W7D	0.198
5	4M47G7D	0.242	4M48W7D	0.200
10	8M84G7D	0.241	8M93W7D	0.203
15	13M4G7D	0.234	13M4W7D	0.200
20	17M9G7D	0.244	17M9W7D	0.198

LTE Band 4	QPSK		16QAM	
BW(MHz)	Emission Designator (99%OBW)	Maximum EIRP(W)	Emission Designator (99%OBW)	Maximum EIRP(W)
1.4	1M08G7D	0.249	1M08W7D	0.197
3	2M68G7D	0.244	2M68W7D	0.200
5	4M48G7D	0.249	4M48W7D	0.202
10	8M95G7D	0.249	8M95W7D	0.205
15	13M4G7D	0.245	13M4W7D	0.200
20	17M9G7D	0.254	17M9W7D	0.200

LTE Band 5	QPSK		16QAM	
BW(MHz)	Emission Designator (99%OBW)	Maximum EIRP(W)	Emission Designator (99%OBW)	Maximum EIRP(W)
1.4	1M08G7D	0.158	1M08W7D	0.141
3	2M68G7D	0.156	2M68W7D	0.132
5	4M48G7D	0.159	4M48W7D	0.131
10	8M96G7D	0.158	8M94W7D	0.131

LTE Band 7	QPSK		16QAM	
BW(MHz)	Emission Designator (99%OBW)	Maximum EIRP(W)	Emission Designator (99%OBW)	Maximum EIRP(W)
5	4M47G7D	0.241	4M47W7D	0.197
10	8M95G7D	0.242	8M94W7D	0.197
15	13M4G7D	0.237	13M4W7D	0.198
20	17M9G7D	0.240	17M9W7D	0.200

LTE Band 12	QPSK		16QAM	
BW(MHz)	Emission Designator (99%OBW)	Maximum EIRP(W)	Emission Designator (99%OBW)	Maximum EIRP(W)

Hotline: 400-6611-140 Tel: 86-755-27673339 Fax: 86-755-27673332 http://www.tct-lab.com

1.4	1M08G7D	0.168	1M08W7D	0.137
3	2M68G7D	0.163	2M68W7D	0.136
5	4M48G7D	0.166	4M48W7D	0.139
10	8M97G7D	0.166	8M96W7D	0.139

LTE Band 13	**QPSK**		**16QAM**	
BW(MHz)	**Emission Designator (99%OBW)**	**Maximum EIRP(W)**	**Emission Designator (99%OBW)**	**Maximum EIRP(W)**
5	4M48G7D	0.162	4M48W7D	0.134
10	8M96G7D	0.160	8M94W7D	0.133

LTE Band 17	**QPSK**		**16QAM**	
BW(MHz)	**Emission Designator (99%OBW)**	**Maximum EIRP(W)**	**Emission Designator (99%OBW)**	**Maximum EIRP(W)**
5	4M48G7D	0.164	4M48W7D	0.139
10	8M93G7D	0.167	8M93W7D	0.138

LTE Band 25	**QPSK**		**16QAM**	
BW(MHz)	**Emission Designator (99%OBW)**	**Maximum EIRP(W)**	**Emission Designator (99%OBW)**	**Maximum EIRP(W)**
1.4	1M08G7D	0.271	1M08W7D	0.220
3	2M69G7D	0.262	2M68W7D	0.217
5	4M48G7D	0.270	4M48W7D	0.220
10	8M97G7D	0.267	8M97W7D	0.219
15	13M4G7D	0.259	13M4W7D	0.221
20	17M9G7D	0.276	17M9W7D	0.219

LTE Band 41	**QPSK**		**16QAM**	
BW(MHz)	**Emission Designator (99%OBW)**	**Maximum EIRP(W)**	**Emission Designator (99%OBW)**	**Maximum EIRP(W)**
5	4M48G7D	0.254	4M47W7D	0.204
10	8M94G7D	0.267	8M94W7D	0.211
15	13M4G7D	0.251	13M4W9D	0.205
20	17M9G7D	0.263	17M9W7D	0.201

4. General Information

4.1. Test environment and mode

Operating Environment:	
Temperature:	24.0 °C
Humidity:	54 % RH
Atmospheric Pressure:	1010 mbar
Test Mode:	
Operation mode:	Keep the EUT in continuous transmitting with modulation
The sample was placed 0.8m above the ground plane of 3m chamber. Measurements in both horizontal and vertical polarities were performed. During the test, each emission was maximized by: having the EUT continuously working, investigated all operating modes, rotated about all 3 axis (X, Y & Z) and considered typical configuration to obtain worst position, manipulating interconnecting cables, rotating the turntable, varying antenna height from 1m to 4m in both horizontal and vertical polarizations. The emissions worst-case are shown in Test Results of the following pages.	

Description Operation Frequency

LTE Band 2(1.4MHz)		LTE Band 2(3MHz)	
Channel	Frequency (MHz)	Channel	Frequency (MHz)
18607	1850.7	18615	1851.5
18900	1880	18900	1880
19193	1909.3	19185	1908.5
LTE Band 2(5MHz)		LTE Band 2(10MHz)	
Channel	Frequency (MHz)	Channel	Frequency (MHz)
18625	1852.5	18650	1855
18900	1880	18900	1880
19175	1907.5	19150	1905
LTE Band 2(15MHz)		LTE Band 2(20MHz)	
Channel	Frequency (MHz)	Channel	Frequency (MHz)
18675	1857.5	18700	1860
18900	1880	18900	1880
19125	1902.5	19100	1900

LTE Band 4(1.4MHz)		LTE Band 4(3MHz)	
Channel	Frequency (MHz)	Channel	Frequency (MHz)
19957	1710.7	19965	1711.5
20175	1732.5	20175	1732.5
20393	1754.3	20385	1753.5
LTE Band 4(5MHz)		LTE Band 4(10MHz)	
Channel	Frequency (MHz)	Channel	Frequency (MHz)
19975	1712.5	20000	1715
20175	1732.5	20175	1732.5
20375	1752.5	20350	1750
LTE Band 4(15MHz)		LTE Band 4(20MHz)	
Channel	Frequency (MHz)	Channel	Frequency (MHz)
20025	1717.5	20050	1720
20175	1732.5	20175	1732.5
20325	1747.5	20300	1745

LTE Band 5(1.4MHz)		LTE Band 5(3MHz)	
Channel	Frequency (MHz)	Channel	Frequency (MHz)
20407	824.7	20415	825.5
20525	836.5	20525	836.5
20643	848.3	20635	847.5
LTE Band 5(5MHz)		LTE Band 5(10MHz)	
Channel	Frequency (MHz)	Channel	Frequency (MHz)
20425	826.5	20450	829
20525	836.5	20525	836.5
20625	846.5	20600	844

LTE Band 7(5MHz)		LTE Band 7(10MHz)	
Channel	Frequency (MHz)	Channel	Frequency (MHz)
20775	2502.5 MHz	20800	2505.0 MHz
21100	2535	21100	2535
21425	2567.5 MHz	21400	2565.0 MHz
LTE Band 7(15MHz)		LTE Band 7(20MHz)	
Channel	Frequency (MHz)	Channel	Frequency (MHz)
20825	2507.5	20850	2510.0 MHz
21100	2535	21100	2535
21375	2562.5	21350	2560.0 MHz

LTE Band 12(1.4MHz)		LTE Band 12(3MHz)	
Channel	Frequency (MHz)	Channel	Frequency (MHz)
23017	699.7	23025	700.5
23095	707.5	23095	707.5
23173	715.3	23165	714.5
LTE Band 12(5MHz)		LTE Band 12(10MHz)	
Channel	Frequency (MHz)	Channel	Frequency (MHz)
23035	701.5	23060	704
23095	707.5	23095	707.5
23155	713.5	23130	711

LTE Band 13(5MHz)		LTE Band 13(10MHz)	
Channel	Frequency (MHz)	Channel	Frequency (MHz)
23205	779.5	23230	782
23230	782	23230	782
23255	784.5	23230	782

LTE Band 17(5MHz)		LTE Band 17(10MHz)	
Channel	Frequency (MHz)	Channel	Frequency (MHz)
23755	706.5	23780	709
23790	710	23790	710
23825	713.5	23800	711

LTE Band 25(1.4MHz)		LTE Band 25(3MHz)	
Channel	Frequency (MHz)	Channel	Frequency (MHz)
26047	1850.7	26055	1851.5
26365	1882,5	26365	1882,5
26683	1914.3	26675	1913.5
LTE Band 25(5MHz)		LTE Band 25(10MHz)	
Channel	Frequency (MHz)	Channel	Frequency (MHz)
26065	1852.5	26090	1855
26365	1882,5	26365	1882,5
26665	1912.5	26640	1910
LTE Band 25(15MHz)		LTE Band 25(20MHz)	
Channel	Frequency (MHz)	Channel	Frequency (MHz)
26115	1857.5	26140	1860
26365	1882,5	26365	1882,5
26615	1907.5	26590	1905

LTE Band 41(5MHz)		LTE Band 41(10MHz)	
Channel	Frequency (MHz)	Channel	Frequency (MHz)
40265	2557.5	40290	2560
40740	2605	40740	2605
41215	2652.5	41190	2650
LTE Band 41(15MHz)		LTE Band 41(20MHz)	
Channel	Frequency (MHz)	Channel	Frequency (MHz)
40315	2562.5	40340	2565
40740	2605	40740	2605
41165	2647.5	40140	2645

Hotline: 400-6611-140 Tel: 86-755-27673339 Fax: 86-755-27673332 http://www.tct-lab.com

4.2. Test Mode

All modes and data rates and positions were investigated.
Test modes are chosen to be reported as the worst case configuration below:

Test Mode		
Band	**Radiated TCs**	**Conducted TCs**
LTE Band 2	QPSK Link (1.4MHz / 3MHz / 5MHz / 10MHz / 15MHz / 20MHz)	16QAM Link (1.4MHz / 3MHz / 5MHz / 10MHz / 15MHz / 20MHz)
LTE Band 4	QPSK Link (1.4MHz / 3MHz / 5MHz / 10MHz / 15MHz / 20MHz)	16QAM Link (1.4MHz / 3MHz / 5MHz / 10MHz / 15MHz / 20MHz)
LTE Band 5	QPSK Link (1.4MHz / 3MHz / 5MHz / 10MHz)	16QAM Link (1.4MHz / 3MHz / 5MHz / 10MHz)
LTE Band 7	QPSK Link (5MHz / 10MHz / 15MHz / 20MHz)	16QAM Link (5MHz / 10MHz / 15MHz / 20MHz)
LTE Band 12	QPSK Link (1.4MHz / 3MHz / 5MHz / 10MHz)	16QAM Link (1.4MHz / 3MHz / 5MHz / 10MHz)
LTE Band 13	QPSK Link (5MHz / 10MHz)	16QAM Link (5MHz / 10MHz)
LTE Band 17	QPSK Link (5MHz / 10MHz)	16QAM Link (5MHz / 10MHz)
LTE Band 25	QPSK Link (1.4MHz / 3MHz / 5MHz / 10MHz / 15MHz / 20MHz)	16QAM Link (1.4MHz / 3MHz / 5MHz / 10MHz / 15MHz / 20MHz)
LTE Band 41	QPSK Link (5MHz / 10MHz / 15MHz / 20MHz)	16QAM Link (5MHz / 10MHz / 15MHz / 20MHz)

Antenna port conducted and radiated test items were performed according to KDB 971168 D01 Power Meas License Digital Systems v03 with maximum output power. Radiated measurements were performed with rotating EUT in different three orthogonal test planes to find the maximum emission.

Test Items	Band	Bandwidth (MHz)						Modulation		RB #			Test Channel		
		1.4	3	5	10	15	20	QPSK	16QAM	1	Half	Full	L	M	H
Max. Output Power	2	v	v	v	v	v	v	v	v	v	v	v	v	v	v
	4	v	v	v	v	v	v	v	v	v	v	v	v	v	v
	5	v	v	v	v	-	-	v	v	v	v	v	v	v	v
	7	-	-	v	v	v	v	v	v	v	v	v	v	v	v
	12	v	v	v	v	-	-	v	v	v	v	v	v	v	v
	13	-	-	v	v	-	-	v	v	v	v	v	v	v	v
	17	-	-	v	v	-	-	v	v	v	v	v	v	v	v
	25	v	v	v	v	v	v	v	v	v	v	v	v	v	v
	41	-	-	v	v	v	v	v	v	v	v	v	v	v	v
Peak-to-Average Ratio	2	v	v	v	v	v	v	v	v	v	v	v	v	v	v
	4	v	v	v	v	v	v	v	v	v	v	v	v	v	v
	5	v	v	v	v	-	-	v	v	v	v	v	v	v	v
	7	-	-	v	v	v	v	v	v	v	v	v	v	v	v
	12	v	v	v	v	-	-	v	v	v	v	v	v	v	v
	13	-	-	v	v	-	-	v	v	v	v	v	v	v	v
	17	-	-	v	v	-	-	v	v	v	v	v	v	v	v
	25	v	v	v	v	v	v	v	v	v	v	v	v	v	v
	41	-	-	v	v	v	v	v	v	v	v	v	v	v	v
26dB and 99% Bandwidth	2	v	v	v	v	v	v	v	v	v	v	v	v	v	v
	4	v	v	v	v	v	v	v	v	v	v	v	v	v	v
	5	v	v	v	v	-	-	v	v	v	v	v	v	v	v
	7	-	-	v	v	v	v	v	v	v	v	v	v	v	v
	12	v	v	v	v	-	-	v	v	v	v	v	v	v	v
	13	-	-	v	v	-	-	v	v	v	v	v	v	v	v
	17	-	-	v	v	-	-	v	v	v	v	v	v	v	v
	25	v	v	v	v	v	v	v	v	v	v	v	v	v	v
	41	-	-	v	v	v	v	v	v	v	v	v	v	v	v

Test Items	Band	Bandwidth (MHz)						Modulation		RB #			Test Channel		
		1.4	3	5	10	15	20	QPSK	16QAM	1	Half	Full	L	M	H
Conducted Band Edge	2	v	v	v	v	v	v	v	v	v	v	v	v	-	v
	4	v	v	v	v	v	v	v	v	v	v	v	v	-	v
	5	v	v	v	v	-	-	v	v	v	v	v	v	-	v
	7	-	-	v	v	v	v	v	v	v	v	v	v	-	v
	12	v	v	v	v	-	-	v	v	v	v	v	v	v	v
	13	-	-	v	v	-	-	v	v	v	v	v	v	v	v
	17	-	-	v	v	-	-	v	v	v	v	v	v	v	v
	25	v	v	v	v	v	v	v	v	v	v	v	v	v	v
	41	-	-	v	v	v	v	v	v	v	v	v	v	v	v
Conducted Spurious Emission	2	v	v	v	v	v	v	v	v	v	-	-	v	v	v
	4	v	v	v	v	v	v	v	v	v	-	-	v	v	v
	5	v	v	v	v	-	-	v	v	v	-	-	v	v	v
	7	-	-	v	v	v	v	v	v	v	-	-	v	v	v
	12	v	v	v	v	-	-	v	v	v	v	v	v	v	v
	13	-	-	v	v	-	-	v	v	v	v	v	v	v	v
	17	-	-	v	v	-	-	v	v	v	v	v	v	v	v
	25	v	v	v	v	v	v	v	v	v	v	v	v	v	v
	41	-	-	v	v	v	v	v	v	v	v	v	v	v	v
Frequency Stability	2	v	-	-	-	-	-	v	v	v	-	-	v	v	v
	4	v	-	-	-	-	-	v	v	v	-	-	v	v	v
	5	v	-	-	-	-	-	v	v	v	-	-	v	v	v
	7	-	-	v	-	-	-	v	v	v	-	-	v	v	v
	12	v						v	v	v	-	-	v	v	v
	13			v				v	v	v	-	-	v	v	v
	17	-	-	v	-	-	-	v	v	v	-	-	v	v	v
	25	v	-	-	-	-	-	v	v	v	-	-	v	v	v
	41	-	-	v	-	-	-	v	v	v	-	-	v	v	v
E.R.P./ E.I.R.P.	2	v	v	v	v	v	v	v	v	v	v	v	v	v	v
	4	v	v	v	v	v	v	v	v	v	v	v	v	v	v
	5	v	v	v	v	-	-	v	v	v	v	v	v	v	v
	7	-	-	v	v	v	v	v	v	v	v	v	v	v	v
	12	v	v	v	v	-	-	v	v	v	v	v	v	v	v
	13	-	-	v	v	-	-	v	v	v	v	v	v	v	v
	17	-	-	v	v	-	-	v	v	v	v	v	v	v	v
	25	v	v	v	v	v	v	v	v	v	v	v	v	v	v

	41	-	-	v	v	v	v	v	v	v	v	v	v	v	v
Radiated Spurious Emission	2	v	-	-	-	-	-	v	v	v	-	-	v	v	v
	4	v	-	-	-	-	-	v	v	v	-	-	v	v	v
	5	v	-	-	-	-	-	v	v	v	-	-	v	v	v
	7	-	-	v	-	-	-	v	v	v	-	-	v	v	v
	12	v						v	v	v	-	-	v	v	v
	13			v				v	v	v	-	-	v	v	v
	17	-	-	v	-	-	-	v	v	v	-	-	v	v	v
	25	v	-	-	-	-	-	v	v	v	-	-	v	v	v
	41	-	-	v	-	-	-	v	v	v	-	-	v	v	v
Note	1. The mark "v " means that this configuration is chosen for testing 2. The mark "-" means that this bandwidth is not supported.														

4.3. Description of Support Units

The EUT has been tested as an independent unit together with other necessary accessories or support units. The following support units or accessories were used to form a representative test configuration during the tests.

Equipment	Model No.	Serial No.	FCC ID	Trade Name
/	/	/	/	/

Note:

1. All the equipment/cables were placed in the worst-case configuration to maximize the emission during the test.

2. Grounding was established in accordance with the manufacturer's requirements and conditions for the intended use.

4.4. Configuration of Tested System

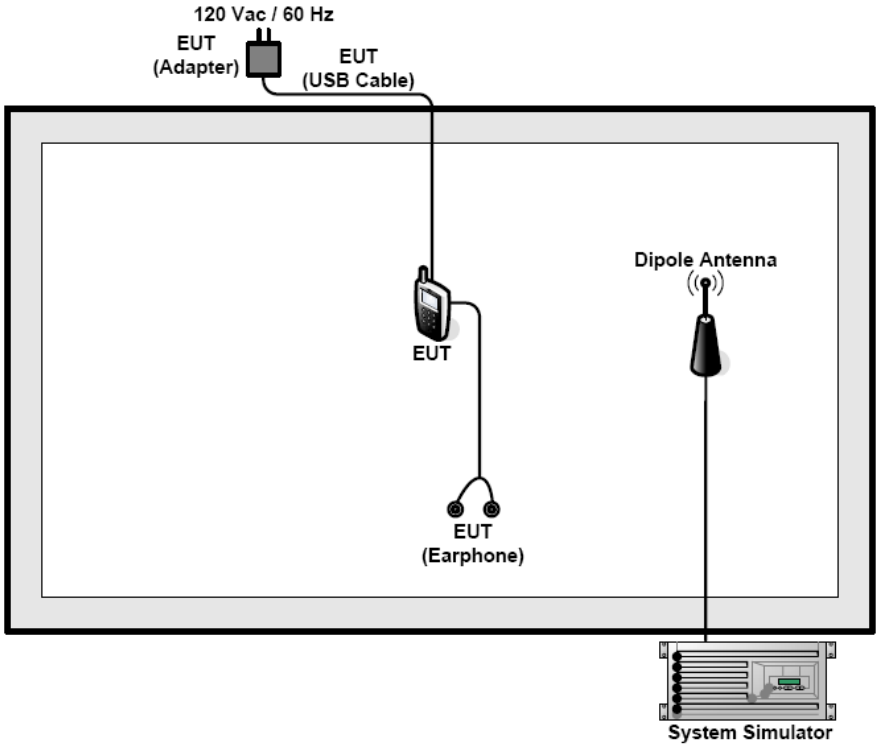

4.5. Measurement Results Explanation Example

For all conducted test items:

The offset level is set in the spectrum analyzer to compensate the RF cable loss and attenuator factor between RF conducted output port and spectrum analyzer. With the offset compensation, the spectrum analyzer reading level will be exactly the RF output level. The spectrum analyzer offset is derived from RF cable loss and attenuator factor.

Offset = RF cable loss + attenuator factor.

5. Facilities and Accreditations

5.1. Facilities

The test facility is recognized, certified, or accredited by the following organizations:

- FCC - Registration No.: 645098
  Shenzhen Tongce Testing Lab.
  The 3m Semi-anechoic chamber has been registered and fully described in a report with the (FCC) Federal Communications Commission. The acceptance letter from the FCC is maintained in our files.
- IC - Registration No.: 10668A-1
  The 3m Semi-anechoic chamber of Shenzhen TCT Testing Technology Co., Ltd. has been registered by Certification and Engineering Bureau of Industry Canada for radio equipment testing

5.2. Location

Shenzhen Tongce Testing Lab
Address: 1B/F., Building 1, Yibaolai Industrial Park, Qiaotou, Fuyong, Baoan District, Shenzhen, Guangdong, China
TEL: +86-755-27673339

5.3. Measurement Uncertainty

The reported uncertainty of measurement y ± U, where expended uncertainty U is based on a standard uncertainty multiplied by a coverage factor of k=2, providing a level of confidence of approximately 95 %.

No.	Item	MU
1	Conducted Emission	±2.56dB
2	RF power, conducted	±0.12dB
3	Spurious emissions, conducted	±0.11dB
4	All emissions, radiated(<1G)	±3.92dB
5	All emissions, radiated(>1G)	±4.28dB
6	Temperature	±0.1°C
7	Humidity	±1.0%

6. Test Results and Measurement Data

6.1. Conducted Output Power Measurement

6.1.1. Test Specification

Test Requirement:	FCC part 27.50(c), FCC part 27.50(d) and FCC part 27.50(h), FCC part 24.232(c), FCC part 22.913;
Test Method:	FCC part 2.1046
Limits:	LTE Band 2: 2W LTE Band 4: 1W LTE Band 5: 7W LTE Band 7: 1W LTE Band 12: 3W LTE Band 13: 3W LTE Band 17: 3W LTE Band 25: 2W LTE Band 41: 2W
Test Setup:	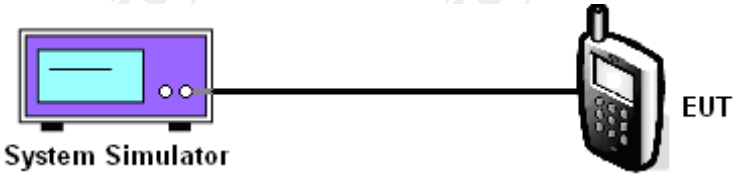
Test Procedure:	1. The transmitter output port was connected to the system simulator. 2. Set EUT at maximum power through system simulator. 3. Select lowest, middle, highest channels for each band and different modulation. 4. Measure and record the power level from the system simulator.
Test Result:	PASS

6.1.2. Test Instruments

Equipment	Manufacturer	Model	Serial Number	Calibration Due
Wideband Radio Communication Tester	R&S	CMW500	114220	Jul. 29, 2020
RF cable (9kHz-40GHz)	TCT	RE-05	N/A	Sep. 08, 2020
Antenna Connector	TCT	RFC-02	N/A	Sep. 08, 2020

Note: *The calibration interval of the above test instruments is 12 months and the calibrations are traceable to international system unit (SI).*

6.2. Peak to Average Ratio

6.2.1. Test Specification

Test Requirement:	FCC part 2.1046; 22.913; 24.232; 27.50(d); 27.50(c); 27.50(b)
Test Method:	FCC KDB 971168 D01v03
Limit:	The peak-to-average ratio (PAR) of the transmission may not exceed 13 dB.
Test Setup:	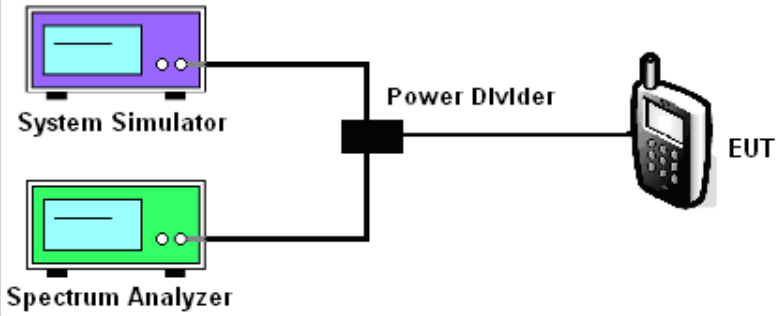
Test Procedure:	1. The testing follows FCC KDB 971168 D01v03 Section 5.7.1. 2. The EUT was connected to spectrum analyzer and system simulator via a power divider. 3. Set EUT to transmit at maximum output power. 4. Set the CCDF (Complementary Cumulative Distribution Function) option of the spectrum analyzer. Record the maximum PAPR level associated with a probability of 0.1%.
Test Result:	PASS

6.2.2. Test Instruments

Equipment	Manufacturer	Model	Serial Number	Calibration Due
Wideband Radio Communication Tester	R&S	CMW500	114220	Jul. 29, 2020
Spectrum Analyzer	Agilent	N9020A	MY49100619	Sep. 11, 2020
RF cable (9kHz-40GHz)	TCT	RE-05	N/A	Sep. 08, 2020
Antenna Connector	TCT	RFC-02	N/A	Sep. 08, 2020

Note: *The calibration interval of the above test instruments is 12 months and the calibrations are traceable to international system unit (SI).*

6.3. 99% Occupied Bandwidth and 26dB Bandwidth Measurement

6.3.1. Test Specification

Test Requirement:	FCC part 27.53(h)(3) and FCC part 27.53(m)(6), FCC part 24.238(b)
Test Method:	FCC part 2.1049
Limit:	N/A
Test Setup:	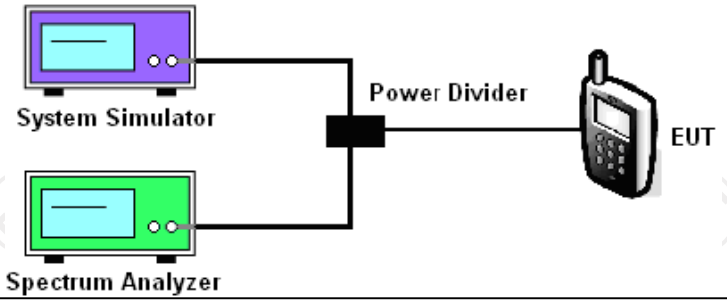
Test Procedure:	1. The testing follows FCC KDB 971168 D01v03 Section 4.2. 2. The EUT was connected to the spectrum analyzer and system simulator via a power divider. 3. The RF output of the EUT was connected to the spectrum analyzer by RF cable and attenuator. The path loss was compensated to the results for each measurement. 4. The 99% occupied bandwidth were measured, set RBW= 1% of OBW, VBW= 3*RBW, sample detector, trace maximum hold. 5. The 26dB bandwidth were measured, set RBW= 1% of EBW, VBW= 3*RBW, peak detector, trace maximum hold.
Test Result:	PASS

6.3.2. Test Instruments

Equipment	Manufacturer	Model	Serial Number	Calibration Due
Wideband Radio Communication Tester	R&S	CMW500	114220	Jul. 29, 2020
Spectrum Analyzer	Agilent	N9020A	MY49100619	Sep. 11, 2020
RF cable (9kHz-40GHz)	TCT	RE-05	N/A	Sep. 08, 2020
Antenna Connector	TCT	RFC-02	N/A	Sep. 08, 2020

Note: *The calibration interval of the above test instruments is 12 months and the calibrations are traceable to international system unit (SI).*

6.4. Band Edge and Conducted Spurious Emission Measurement

6.4.1. Test Specification

Test Requirement:	FCC part 27.53(h), FCC part 27.53(g) , FCC part 27.53(m)(4), FCC part 24.238(a), 22.917(a)
Test Method:	FCC part2.1051
Limit:	-13dBm
Test Setup:	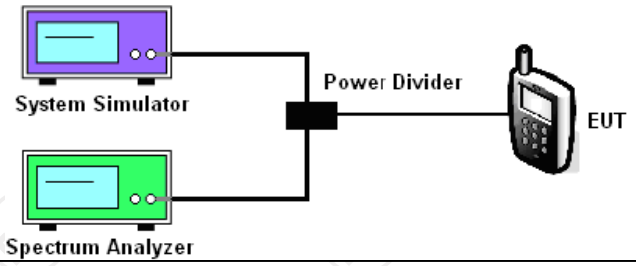
Test Procedure:	1. The testing follows FCC KDB 971168 D01v03 Section 6.0. 2. The EUT was connected to the spectrum analyzer and system simulator via a power divider. 3. The RF output of EUT was connected to the spectrum analyzer by an RF cable and attenuator. The path loss was compensated to the results for each measurement. 4. The band edges of low and high channels for the highest RF powers were measured. 5. The conducted spurious emission for the whole frequency range was taken. 6. The RF fundamental frequency should be excluded against the limit line in the operating frequency band. 7. The limit line is derived from 43 + 10log(P) dB below the transmitter power P(Watts) = P(W) - [43 + 10log(P)] (dB) = [30 + 10log(P)] (dBm) - [43 + 10log(P)] (dB) = -13dBm. For Band 17, he limit line is derived from 55 + 10log(P) dB below the transmitter power
Test Result:	PASS

6.4.2. Test Instruments

Equipment	Manufacturer	Model	Serial Number	Calibration Due
Wideband Radio Communication Tester	R&S	CMW500	114220	Jul. 29, 2020
Spectrum Analyzer	Agilent	N9020A	MY49100619	Sep. 11, 2020
RF cable (9kHz-40GHz)	TCT	RE-05	N/A	Sep. 08, 2020
Antenna Connector	TCT	RFC-02	N/A	Sep. 08, 2020

Note: *The calibration interval of the above test instruments is 12 months and the calibrations are traceable to international system unit (SI).*

6.5. Field Strength of Spurious Radiation Measurement

6.5.1. Test Specification

Test Requirement:	FCC part 27.53(g) ,FCC part 27.53(h), FCC part 27.53(m)(4), FCC part 22.917(a), 24.238(b)
Test Method:	FCC part 2.1053
Limit:	30MHz~20GHz -13dBm
Test setup:	From 30MHz to 1GHz 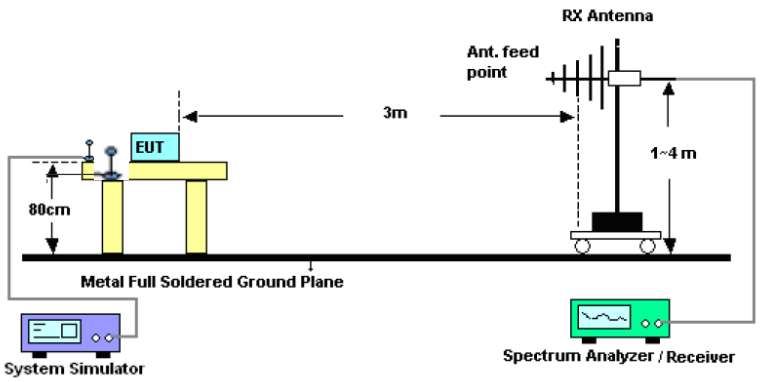 Above 1GHz 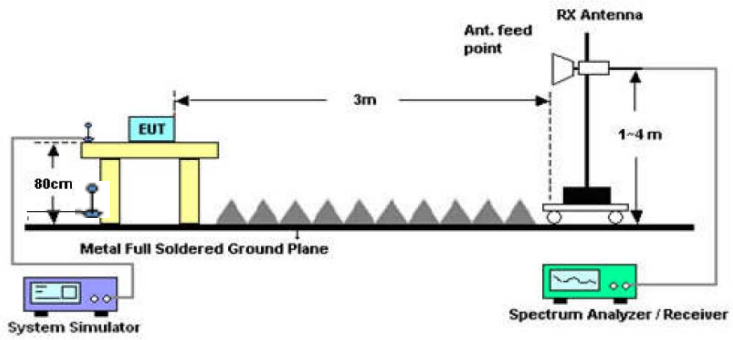
Test Procedure:	1. The testing follows FCC KDB 971168 D01v03 Section 5.8 and ANSI / TIA-603-D-2010Section 2.2.12. 2. The EUT was placed on a rotatable wooden table 0.8 meters above the ground. 3. The EUT was set 3 meters from the receiving antenna, which was mounted on the antenna tower. 4. The table was rotated 360 degrees to determine the position of the highest spurious emission. 5. The height of the receiving antenna is varied between one meter and four meters to search for the maximum spurious emission for both horizontal and vertical polarizations. 6. Make the measurement with the spectrum analyzer's

	RBW = 1MHz, VBW = 3MHz, taking record of maximum spurious emission. 7. A horn antenna was substituted in place of the EUT and was driven by a signal generator. 8. Tune the output power of signal generator to the same emission level with EUT maximum spurious emission. 9. Taking the record of output power at antenna port. 10. Repeat step 7 to step 8 for another polarization. 11. EIRP (dBm) = S.G. Power – Tx Cable Loss + Tx Antenna Gain 12. ERP (dBm) = EIRP - 2.15 13. The RF fundamental frequency should be excluded against the limit line in the operating frequency band. 14. The limit line is derived from 43 + 10log(P) dB below the transmitter power P(Watts) = P(W) - [43 + 10log(P)] (dB) = [30 + 10log(P)] (dBm) - [43 + 10log(P)] (dB) = -13dBm. For Band 17, he limit line is derived from 55 + 10log(P) dB below the transmitter power
Test results:	PASS

6.5.2. Test Instruments

Radiated Emission Test Site (966)				
Name of Equipment	**Manufacturer**	**Model**	**Serial Number**	**Calibration Due**
System simulator	R&S	CMU200	111382	Sep. 11, 2020
Spectrum Analyzer	ROHDE&SCHWARZ	R&S	FSQ40	Sep. 11, 2020
Signal Generator	HP	83623B	3614A00396	Sep. 08, 2020
Broadband Antenna	Schwarzbeck	VULB9163	340	Sep. 06, 2020
Horn Antenna	Schwarzbeck	BBHA 9120D	631	Sep. 06, 2020
Broadband Antenna	Schwarzbeck	VULB9163	412	Sep. 06, 2020
Horn Antenna	Schwarzbeck	BBHA 9120D	1201	Sep. 06, 2020
Horn Antenna	Schwarzbeck	BBH 9170	582	Sep. 06, 2020
Dipole Antenna	TCT	TCT-RF	N/A	Sep. 08, 2020
Coax cable (9kHz-40GHz)	TCT	RE-high-02	N/A	Sep. 08, 2020
Coax cable (9kHz-40GHz)	TCT	RE-High-04	N/A	Sep. 08, 2020
Antenna Mast	Keleto	CC-A-4M	N/A	N/A
EMI Test Software	Shurple Technology	EZ-EMC	N/A	N/A

Note: *The calibration interval of the above test instruments is 12 months and the calibrations are traceable to international system unit (SI).*

6.6. Frequency Stability Measurement

6.6.1. Test Specification

Test Requirement:	FCC part 27.54, FCC part 22.355, 24.235
Test Method:	FCC Part 2.1055
Limit:	±2.5 ppm
Test Setup:	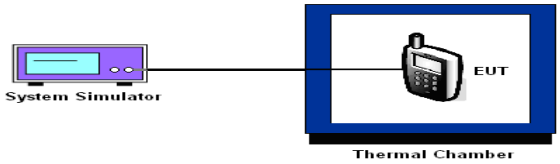
Test Procedure:	**Test Procedures for Temperature Variation** 1. The testing follows FCC KDB 971168 D01v03 Section 9.0. 2. The EUT was set up in the thermal chamber and connected with the system simulator. 3. With power OFF, the temperature was decreased to -30°C and the EUT was stabilized before testing. Power was applied and the maximum change in frequency was recorded within one minute. 4. With power OFF, the temperature was raised in 10°C steps up to 50°C. The EUT was stabilized at each step for at least half an hour. Power was applied and the maximum frequency change was recorded within one minute. **Test Procedures for Voltage Variation** 1. The testing follows FCC KDB 971168 D01v03 Section 9.0. 2. The EUT was placed in a temperature chamber at 25±5° C and connected with the system simulator. 3. The power supply voltage to the EUT was varied from BEP to 115% of the nominal value measured at the input to the EUT. 4. The variation in frequency was measured for the worst case.
Test Result:	PASS

6.6.2. Test Instruments

Equipment	Manufacturer	Model	Serial Number	Calibration Due
Wideband Radio Communication Tester	R&S	CMW500	114220	Jul. 29, 2020
Programable tempratuce and humidity chamber	JQ	JQ-2000	N/A	Sep. 08, 2020
DC power supply	Kingrang	KR3005K 30V/5A	N/A	Sep. 08, 2020
RF cable (9kHz-40GHz)	TCT	RE-04	N/A	Sep. 08, 2020
Antenna Connector	TCT	RFC-03	N/A	Sep. 08, 2020

Note: *The calibration interval of the above test instruments is 12 months and the calibrations are traceable to international system unit (SI).*

Appendix A: Photographs of Test Setup

Refer to test report TCT190614E012

Appendix B: Photographs of EUT

Refer to test report TCT190614E012

Test Data for Appendix For LTE Band 2, Appendix For LTE Band 4, Appendix For LTE Band 5, Appendix For LTE Band 7, Appendix For LTE Band 12, Appendix For LTE Band 13, Appendix For LTE Band 17, Appendix For LTE Band 25, Appendix For LTE Band 41

********END OF REPORT********