# GDU SAGA

## User Manual V1.0

**July 2018**

©2018 GDU-Tech Co., Ltd. All rights reserved

**Search**

Keywords in a PDF document can be searched with the look-up function. For example, for Adobe Acrobat Reader, a Windows user can use Ctrl+F and a Mac user can use Command+F to search keywords.

**Jump by clicking bookmark**

In Adobe Acrobat Reader, a user can grasp the content structure of the document by clicking the bookmark and jump to a page by clicking the corresponding title.

**Print**

This document supports printing.

**Contents**


Features....4

User Notice....5

**Warning**....5

**Instructional Video**....5

**Download GDU Flight App**....5

**Registration**....6

**Real-Name Registration of Unmanned Aerial Vehicle (UAV)**....6

Safety Overview....7

Product Overview....8

**Preparation of Aircraft and Remote Control**....8

**Name of aircraft component**....9

**Name of Remote Control Components**....10

Aircraft....11

**Aircraft Status Indicator**....11

**Flight Mode**....11

**Automatic Return**....12

**Intelligent Vision System**....14

**Intelligent Flight Function**....16

**Propeller**....19

**Intelligent Battery**.....20
Remote Control.....24
**Use of the Remote Control**.....24
**HD Image Transmission**.....24
**Installation of Mobile Device**.....25
**Control of Aircraft**.....25
Camera Gimbal.....28
**Overview of Gimbal**.....28
**Installation of Camera Gimbal**.....29
**Control of Camera Gimbal**.....29
GDU Flight App.....31
**Device**.....31
Flight.....37
**Inspection before Flight**.....37
**Calibration of Magnetometer**.....37
**Basic Flight**.....39
Technical Parameters.....41

CE

# Features

## Foldable Structure

The platform including the body, landing gear and propellers of the aircraft are fully foldable based on the structural strength and design.

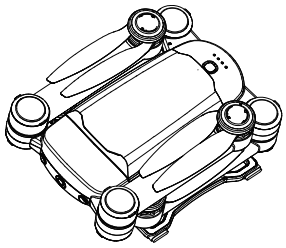

## Fully Adaptable Platform

This platform is capable of carrying a 4K gimbal as well as 4K*30X HD and infrared cameras, making the disassembly and assembly of the gimbal easier with its quick-remove design.

## HD Image Transmission

Provided with HD image transmission module, the aircraft can transmit HD video and take photos in real time with a transmission distance of 10km.

## Endurance – Long Lasting Performance

GDU SAGA is equipped with a large-capacity battery, and with optimization made in terms of this dynamic system and all performance indexes, its endurance time is increased to 35min.

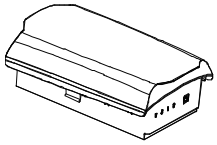

## Intelligent Vision System

GDU SAGA is configured with advanced forward and downward-vision systems which enable intelligent obstacle avoidance, tracking, and visual circling. The powerful visual system makes the aircraft more intelligent.

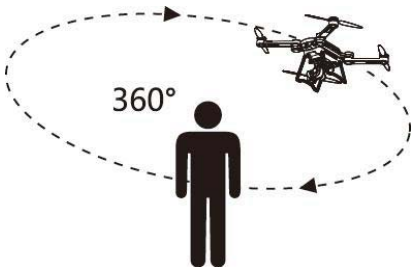

# User Notice

## Warning

Thanks for choosing GDU. This is a special electronic product. Incorrect operation may lead to damaging the product or personal injury, even death, and the resulting legal consequences shall be borne by yourself (the user). Do not use the product if you're under the age of 18. To ensure your experience and safety, please read the following documents in depth before using the product:

Disclaimer

List of Items

User Manual

Quick Start Guide

Instructions to Safe Use of Battery

Routine Maintenance Manual

Prior notice will not be made if there are any updates. Please refer to the latest version on the official website: www.gdu-tech.com.

**※The product parameters in the documents only represent the state as delivered, and the actual situation shall remain.**

## Instructional Video

In addition to documents, an introductory instructional video is also available.

You can gain access to the instructional video on the official website through http://www.gdu-tech.com/cn/video/getlist.html or by scanning the QR code below to learn how to use the product. Watching with a WIFI connection is recommended.

## Download GDU Flight App

Please visit the official website www.gdu-tech.com or scan the QR code below to download and install the App. Please use the product with the App.

※ **GDU Flight App requires iOS8.0 or above or Android5.0 or above.**

## Registration

To ensure better after-sales services, please visit www.gdu-tech.com for registration. Registration does not affect the normal use of the product, however registering as a GDU member is still recommended. GDU will push the latest official news and special offers to members from time to time.

※ **The user's personal information will be kept strictly confidential once the registration is completed.**

## Real-Name Registration of Unmanned Aerial Vehicle (UAV)

According to the *Regulations on Real-name Registration of Civil Unmanned Aerial Vehicles* of the Civil Aviation Administration of China, the owner of an unmanned aerial vehicle shall complete the real-name registration on the registry system (http://uas.caac.gov.cn) and paste the registration mark given by the system on the vehicle.

# Safety Overview

**1. Environment**

· Do not fly in bad weather such as rain, thunder, lightning, hail, strong winds, heavy fog, dust, and extremely cold weather.

· Please fly in open spaces, a tall building could block signals necessary for GPS positioning.

· Please ensure a secyre flight by keeping the vehicle in sight and away from obstacles, people, and water.

· Do not fly in areas with high-voltage lines, telecommunication base stations or launch towers to avoid interference with remote control signals.

· Please operate with care when flying at an altitude over 4,000m.

· Please fly within legal areas.

**2. Operation**

· Do not make or answer calls in the course of flying. Please pay close attention to the display of the GDU Flight App to ensure flight safety.

· Please return and land as soon as possible when the low power signal is on.

· The aircraft will be forced to return when a severely low power signal is received, at which point please control the aircraft to land in a safe place.

· After landing, please turn off the power of the aircraft prior to other actions.

· Do not stop the motor at will, during the flight under non-emergency circumstances, so as to protect people from being injured by a falling aircraft.

· The propeller rotates at a high speed during the flight, which is extremely dangerous. Please keep a safe distance from the aircraft to ensure safety.

**3. Maintenance**

· Please replace the battery if it is found with any damage, bulge, or leakage.

· If there is an abnormal sound when the motor is activated without the propeller installed, then there may be some deterioration. If so please replace the motor.

· Please replace a deformed broken propeller blade in time.

· Please keep the PTZ camera lens clean, and ensure that it is cleaned with a professional cleaning kit.

# Product Overview

## Preparation of Aircraft and Remote Control

1. Unfold landing gears in turn;

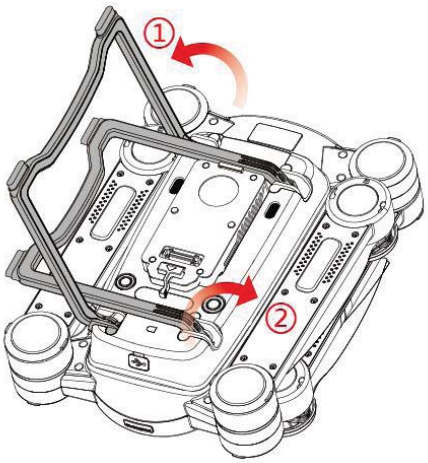


2. Extend arms to the limit and unfold blades in turn;

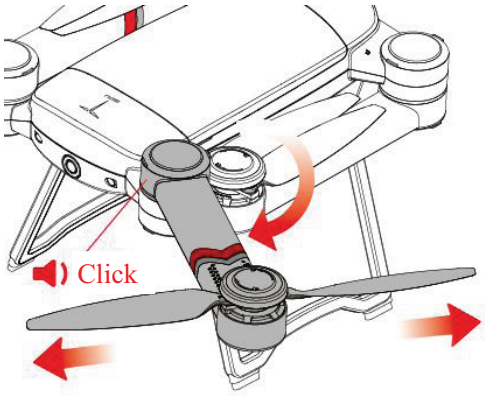


※ **Please control the strength of extending the arms when unfolding the aircraft. Please stop extending when the structural limit is reached.**

3. Unfold the remote control.

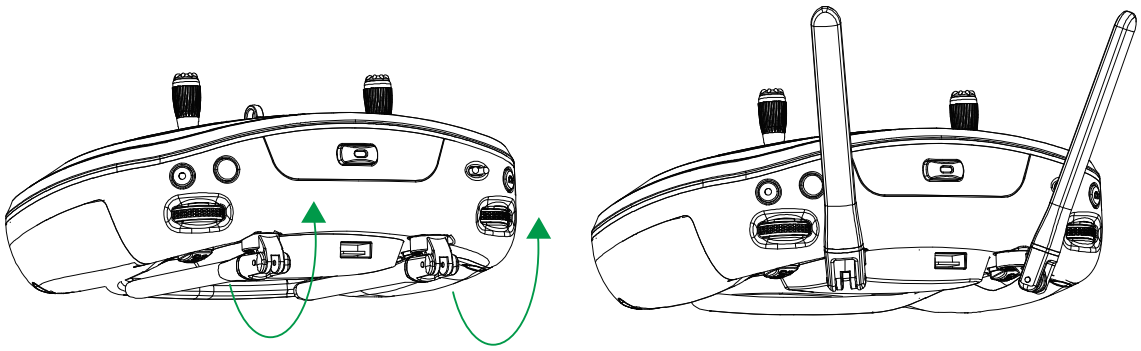

**Name of aircraft component**

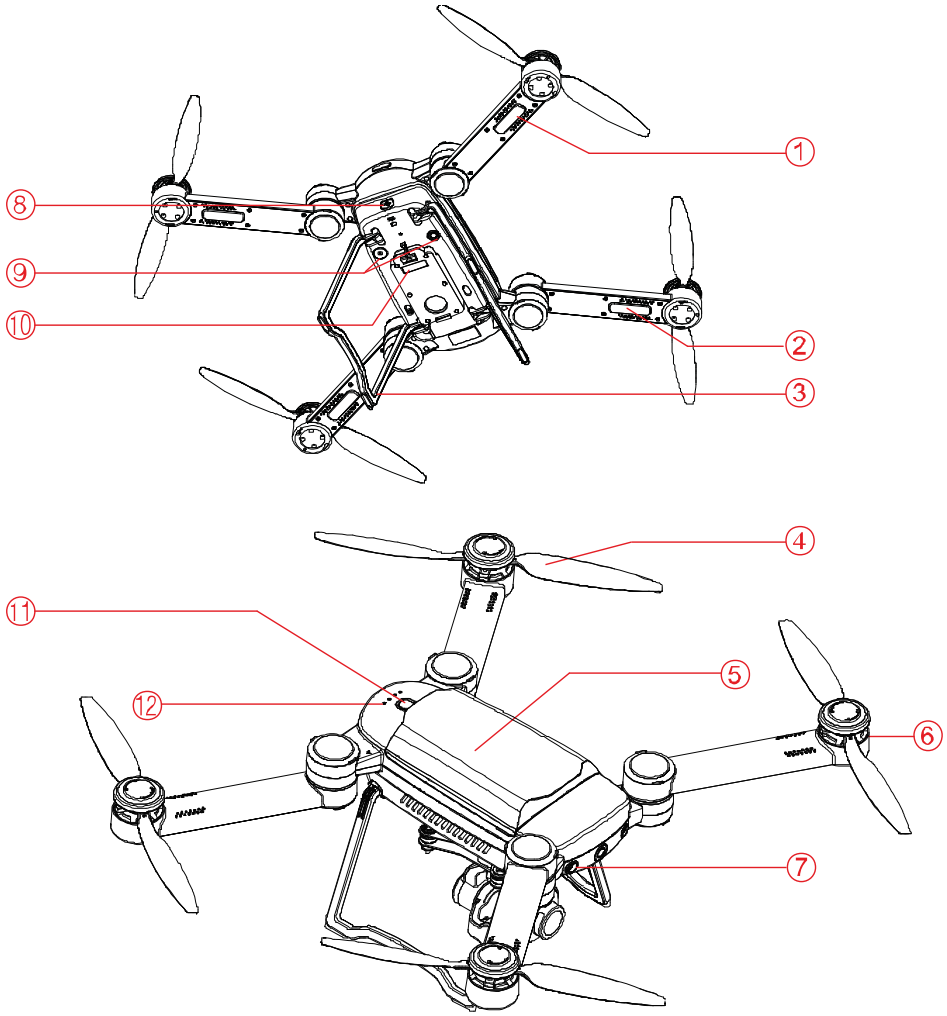


| | |
|---|---|
| 1. Aircraft Rear LED Indicator | 7. Forward Vision System |
| 2. Aircraft Front LED Indicator | 8. Parameter Adjustment Interface |
| 3. Landing Gear | 9. Downward Vision System |
| 4. Propellers | 10. Gimbal Interface |
| 5. Intelligent Battery | 11. Power Button |
| 6. Motors | 12. Power Indicator of Aircraft |

## Name of Remote Control Components

1. Mobile Device Support
2. Antenna
3. Control Sticks
4. One-Click Take-off
5. Power Button & Remote Control Power Status Indicator
6. Gimbal Reset Button
7. Record Button
8. Gimbal Pitch Dial

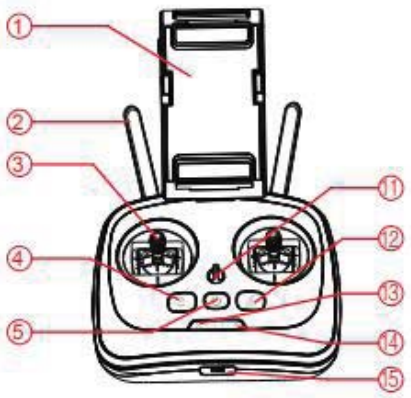

9. Customizable Button C2
10. Handle
11. Strap Hole
12. RTH ( Return to Home) Button
13. Aircraft Battery Level Indicator
14. Remote Control Signal Strength Indicator
15. Micro-USB & Charge port
16. Holder lock
17. Flight Mode Switch
18. Shutter Button
19. Gimbal Yaw Dial
20. Customizable Button C1
21. USB Data Port

※ **When the gimbal of a 10X or 30X zoom camera is carried, number 19 refers to the zoom thumbwheel of the camera gimbal.**

# Aircraft

## Aircraft Status Indicator

The flight status of SAGA can be judged by the tail indicator of the aircraft.

| LED light | Status description | Rear LED Indicator | Front LED Indicator |
|---|---|---|---|
| Normal status | Standard GPS mode | ● Red-normally on | ● Green-normally on |
| | Sports GPS mode | ● Red-normally on | ○ Green-slow flashing |
| | Attitude mode | ● Red-normally on | ● Yellow-normally on |
| | Automatic return (RTH) | ● Red-normally on | ◎ Green-quick flashing |
| Magnetic Sensor calibration | Enter horizontal calibration mode | ● Yellow-normally on | ● Yellow-normally on |
| | Non-horizontal aircraft | ● Yellow-normally on | ◎ Yellow-quick flashing |
| | Successful level calibration | ● Yellow-normally on | ◎ White-quick flashing |
| | Under vertical calibration mode | ● Yellow-normally on | ○ White-normally on |
| | Successful vertical calibration (successful calibration) | ● Red-normally on | ● Green-normally on |
| Anomaly/ Irregularity | IUM fault/magnetic anomaly | ● Red-normally on | ◎ Red-quick flashing |
| | Low power | ● Red-normally on | ○ Red-slow flashing |
| | Severely low power | ● Red-normally on | ◎ Red-quick flashing |
| | Lost status | ● Red-normally on | ● Red-normally on |

## Flight Mode

SAGA supports the following three flight modes:

1. Standard GPS mode (P) (maximum horizontal flight speed: 5m/s)

The GPS module and the intelligent vision system are employed to enable precise hovering and intelligent flight of the aircraft.

2. Sports GPS mode (F) (maximum horizontal flight speed: 15m/s)

GPS module is employed to enable precise hovering. The handling sensitivity of the aircraft is adjusted and the maximum flight speed increases.

3. Attitude mode (A) (maximum horizontal flight speed: 15m/s)

GPS and visual ultrasonic system are not used for positioning, while only attitude stabilization is provided.

Accurate positioning can be realized with the GPS if there is a good GPS signal.

If there is a poor GPS signal, the intelligent vision system is then used for positioning when the light conditions satisfy the use of the system.

If there is a poor GPS signal and the light conditions cannot satisfy the intelligent vision system, the aircraft will be incapable of precise hovering, and the App will prompt the user to land the aircraft.

**Note!** If the sports mode is selected, the forward vision system will be automatically turned off, and then the aircraft can't actively brake and avoid obstacles. The user is required to pay attention to the surroundings and control the aircraft to avoid obstacles on the flight descent.

**Note!** If sports mode is selected, the flight speed and the descending speed of the aircraft will be comparatively faster than standard mode, and the resulting braking distance will change. A braking distance of 30m should be considered to ensure flight safety when there is no wind.

**Note!** If the sports mode is selected, the attitude control sensitivity of the aircraft will be greatly improved compared with the standard mode, which means that the ordinary operation of the remote control will result in greater flight actions. Sufficient flight space should be considered to ensure flight safety during the flight.

## Automatic Return

SAGA has the automatic return to home(RTH) function. There are three ways of automatic return, namely, "one-click return", "low power return" and "lost return".

If the return point is recorded before taking off, the aircraft will automatically return to the top of the return point and land when the user activates the one-click return or the low power return or the lost return is activated due to the disconnected signal between the remote control device and the aircraft.

The return point, also known as the HOME point, means the effective GPS coordinates are recorded by the aircraft when the GPS signal is active during takeoff or flight. It is only valid for the current flight.

When the automatic return is enabled, in the case that the distance between the aircraft and the return point is within 20m, the aircraft will rise ( if below 5m) to the height of 5m for the return or return at current height (if above 5m).

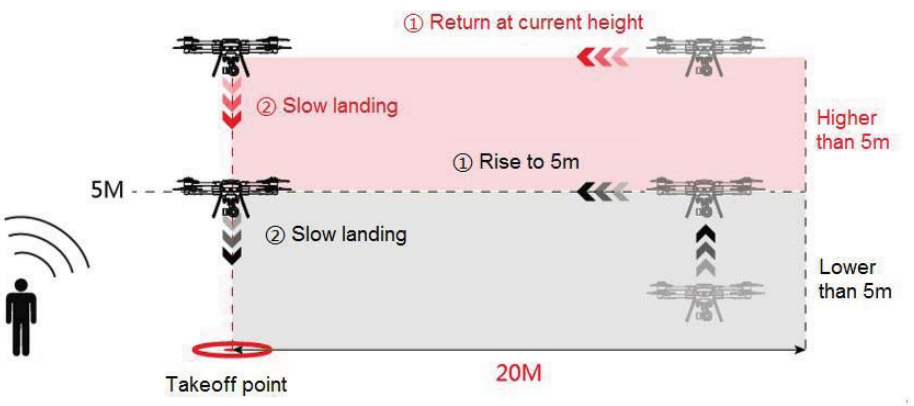

In the case that the aircraft is more than 20m away from the return point, the aircraft will rise to the preset height (the aircraft will remain at the current height if such height is higher than the preset one), fly to the top of the return point, and then land slowly on the ground.

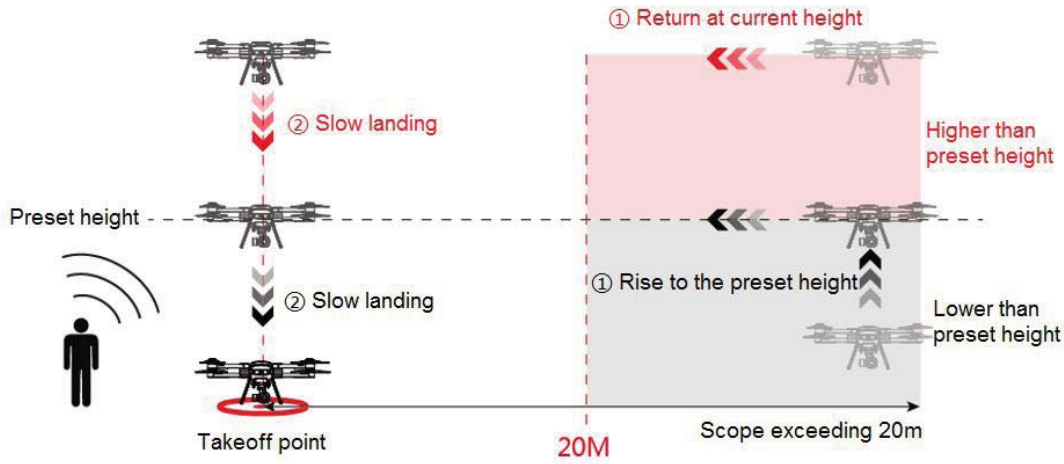


※ **Please set up the height of return via settings - flight settings on App.**

1. One-click return

The automatic return can be used by clicking the "one-click return" button on the remote control or the icon on the App interface during the flight. In the course of return, the height and speed of the aircraft instead of the orientation of nose can be controlled by the remote control, as the user can regain control by canceling the return via the "one-click return" button or the icon on the App interface.

2. Low power return

The low power return includes three mechanisms, which are the early low power warning, low power return, and severely low power landing.

- Early low power warning

The early low power warning will be triggered when the power of the aircraft is less than or equal to 30%. At this moment, the red light of the aircraft will flash slowly and the App will remind the user of the low power.

- Low power return

When the power of the aircraft is less than 20%, the red light of the aircraft will flash quickly and the aircraft will return automatically. In the course of return, the user can cancel the return by short pressing the "one-click return" button of remote control or the icon on the App; the App or the remote control (with normal remote control signal) can control the aircraft during the return and landing.

- Severely low power landing

When the power of the aircraft is less than or equal to 5%, which means a severely low power, the red light of

the aircraft will flash quickly and the aircraft will be forced to land.

※ **The stick can be also used to control the aircraft to land at a proper place in the course of landing.**

※ **The automatic low power return occurs only once in the same flight.**

※ **When the power for return is not enough and when it is excessively low, the user shall land the aircraft as soon as possible.**

3. Lost return

Where there is a good GPS signal, a normally functioning compass, and a successfully recorded return point by aircraft, yet the signal between remote control and aircraft is interrupted, the aircraft will continue hovering; If this signal continues to be interrupted for more than 15s, the aircraft will return automatically. If the signal is restored on the way to the return point, the return process will continue, and the user can cancel the return by shortly pressing the "one-click return" button on the remote control or the

App icon.

Obstacle avoidance during return

If the light conditions satisfy the visual system in the course of the return, with the obstacle avoidance function enabled under the standard mode, the aircraft will, in the case of encountering an obstacle ahead, hover 2m away from the obstacle, rise to avoid the obstacle and then return at the original height.

※ **There is no obstacle avoidance under the sports mode during the return.**

※ **The obstacle avoidance function during return is closed by default. Please start it in the settings of the App if necessary.**

## Intelligent Vision System

The intelligent vision system is composed of the forward vision system and downward vision systems. The forward vision system is placed at both sides of the nose, and includes a binocular vision sensor that senses obstacles by visual image ranging. The downward vision system is placed at the bottom of aircraft and includes a optical flow sensor and an ultrasonic sensor. The light stream is used to obtain the location information of the aircraft, thus providing horizontal location references for the aircraft, while the ultrasonic wave is used to judge the current flight height and provide reference for the distance from the ground to the aircraft to realize a fixed flight height.

**Detection Range**

The detection range of the forward and downward vision systems are shown in the figure below. The aircraft cannot effectively avoid an obstacle if the obstacle is out of the effective range and therefore the flight must be carefully operated .

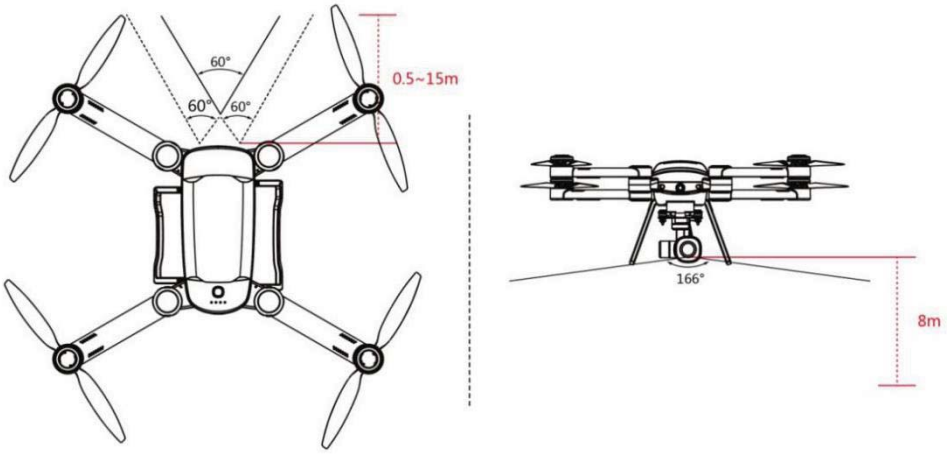


**Application scenario of the downward vision system**

The downward vision system is applicable to the environment under 8m, with poor or no GPS signal.

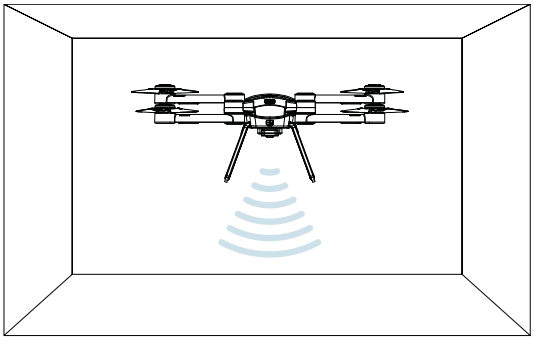

**Steps**

1. Switch the flight mode to the standard mode.
2. Turn on the power of the aircraft and wait for a successful aircraft self-inspection (normally the red light is on at the nose and normally the green light is on at the tail).

**Application scenario of the forward vision system**

The forward vision system is applicable to an environment with good light conditions under the standard mode and an obstacle with clear texture on the flight route.

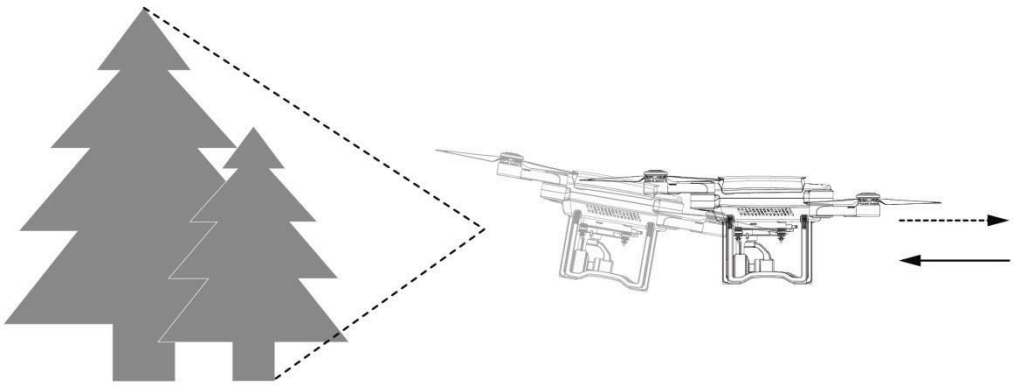

The precision of the intelligent vision system is easily affected by the intensity of the light and the object's surface texture, while the ultrasonic wave may not work in normal ranges because of specific wave-absorbing materials. Therefore, please use the intelligent vision system with care in the following situations:

- Light conditions are less than 10 lux or greater than 10,000 lux.
- The operating temperature is lower than -10℃ or higher than 50℃.
- The flight altitude is over 4,000m.
- The vehicle is moving too fast.
- Solid color surfaces (e.g. pure black/red/white/green).
- Strong reflective surfaces.
- Over water or other transparent surfaces.
- Moving surfaces.
- Intense or rapidly changing lighting.
- Surfaces that are highly absorptive to ultrasonic waves.
- Surfaces with particularly sparse texture.
- Surfaces with highly repetitive texture.
- A surface with an inclination of more than 30 degrees.
- Small obstacles (e.g. wire mesh, net for ball and twig).

## Intelligent Flight Function

Before using the intelligent flight function, attention should be paid to:

1. Ensure good light conditions.
2. Ensure that the forward and downward vision systems' cameras are clear and without any stains.
3. Ensure sufficient power and standard mode of aircraft.
4. Ensure a normal self-inspection through the App before the flight.
5. Fly the aircraft more than 5m above ground with the follow/circle functions.
6. Keep an eye on the surrounding objects on the follow/circle path of aircraft, and be ready at all times to avoid collision by manually controlling the aircraft or clicking the "stop" button on the App in case of an emergency.
7. Ensure a safe distance of over 5m between the aircraft and the pedestrian under follow/circle functions.

8. Use the follow/circle functions carefully if the shape of the target changes greatly or the target is out of sight during moving.

9. When the communication may be interrupted in a complex outdoor electromagnetic environment, click the "one-click return" to avoid an uncontrolled aircraft due to interrupted communication in the course of flight.

10. Abide by local laws and regulations on privacy when using the following function.

**Intelligent obstacle avoidance**

The high-precision and fast detection and avoidance of obstacles by the aircraft are carried out to automatically avoid obstacles during flight.

Operation steps:

1. Start intelligent obstacle avoidance mode

Enter the camera interface by clicking shooting preparation, start "visual obstacle avoidance" and "radar chart display" in settings - perception settings. The aircraft is then in the intelligent obstacle avoidance mode.

2. Using the intelligent obstacle avoidance mode

1) The App displays the distance from the obstacle ahead. The distance will not be displayed if it's greater than 8m as detected by the vision system. The colors of the radar chart displayed on the App vary in green, yellow and red, based on the distance (from far to near).

2) The aircraft will stop at a distance greater than 1.5m from the obstacle ahead, and pushing the advancing stick will then be invalid. The aircraft will automatically retreat to keep a safe distance of more than 1.5m from the obstacle, if the obstacle actively approaches the aircraft.

**Follow Me**

Operation steps:

1. Click the intelligent function button, select "follow me" on the pop-up interface to enter the follow mode. The user will be prompted to select a target.

2. There are two ways to select a target:

A. Double-click: Double-click the face or pedestrian on screen for target detection. The screen will display a green cursor after the target is selected.

B. Frame: Click and drag the frame with a finger to adequately fit the target's outline. The screen will display a green cursor after the target is selected.

After the target is selected, the aircraft will track the target utilizing the PTZ camera, and keep flying at a certain distance from the target.

3. End follow or re-select target

Click the "stop" button on the left of the App's camera interface to exit the current follow session. As the aircraft is hovering with the button displaying "exit" have the aircraft restart the follow function via double-click or framing to turn "exit" into "stop."

4. Exit the following mode and have the aircraft hover in place after clicking "exit".

**Visual Circling**

Operation steps:

1. Click the intelligent function button and select "visual circling" on the pop-up interface to enter the visual surrounding mode. The user will be prompted to select a target.

2. Select the 'visual circling' target by double-clicking or framing the target to make the aircraft fly with the target.

Adjust the direction and speed of the 'visual circling' with the slider on the App interface in the process of surrounding.

3. End visual circling or re-select the target

1) Click the "stop" key on the left of the App camera interface to exit circling. At the moment, the key displays "exit" and the aircraft will hover; When double-click or box selection can be started again, "exit" becomes "stop", and the aircraft is in the follow me state.

3. When clicking "exit", the visual circling mode will exit and the aircraft will continue to hover.

**Points of Interest**

Operation steps:

1. Click the intelligent function key on the App camera interface, and select “points of interest” on the pop-up interface to get into the points of interest mode.

2. Operate the aircraft to the top of interest point, which is taken as the center to set up a radius, then click “start flying”, and then the aircraft flies at a specific radius around the point clockwise at the current height with a speed of 2m/s.

3. When clicking “exit”, the points of interest mode is exited, and the aircraft will continue to hover.

※ **Intelligent obstacle avoidance function is off by default. Please turn it on in the App settings if required.**

※ **Intelligent functions are only open for partial configured aircrafts.**

## Propeller

Folding propellers are used for SAGA, including ‘a’ propeller and ‘b’ propeller, which correspond to different motor rotation directions respectively.

| Propeller | a propeller | b propeller |
|---|---|---|
| Schematic diagram | | |
| Installed location | Installed to the motor shaft that rotates clockwise. | Installed to the motor shaft that rotates anticlockwise. |
| Description of symbol | | Lock: Indicates propeller can be installed through screwing up propeller cap along the direction. |
| | | Unlock: Indicates propeller can be removed through screwing off propeller cap along the direction. |

**Removal and Installation of the Propeller**

Letters ‘a’ and ‘b’ are labeled on the propeller arm, the motor rotor, and the internal surface of the engine arm. Please make sure the letter logos of these three are consistent during the installation.

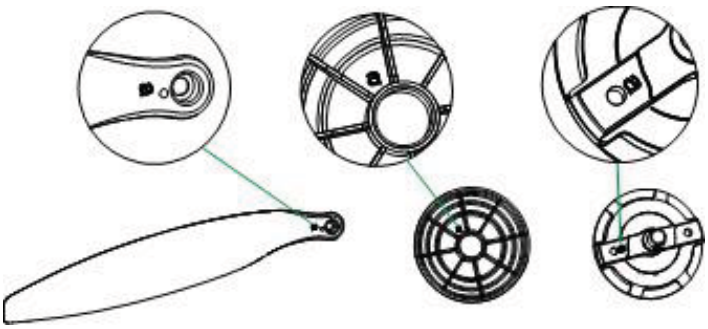

Select the same type of propeller in accordance to the letter on the motor during the installation of the propeller. Set the propeller surface printed with the letter upwards, and screw in the propeller spacer pin on motor. Then, press the propeller blade in the clamp slot of the motor axis in a vertical direction to the spacer pin connection. Rotate the propeller blade by 90 degrees so as to align the spacer pin with hole sites at both ends and then press hard. Finally, screw the propeller cap according to the direction indicated on the propeller cap.

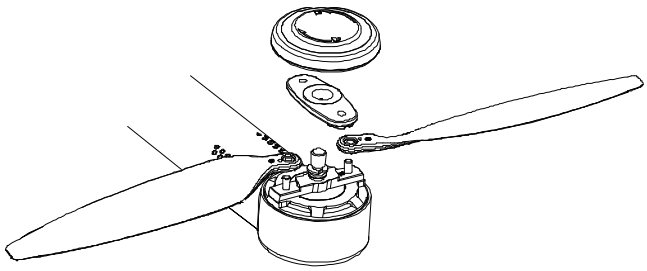

When disassembling the propeller, remove the propeller cap first according to the direction indicated on the propeller cap. Then lift the propeller blade slightly upwards, and remove it after rotating by 90 degrees. Finally, remove the propeller.

**Anti-Ejection Propeller Design**

The anti-ejection design mechanism of the propeller is the second safety guarantee besides the self-locking design of the propeller cap. Even if the propeller cap falls off, the anti-ejection mechanism of the propeller can also prevent the propeller blade from falling. The clamp slot on the propeller blade works with the clamp slot on the motor axis. Only when the blade rotates to a certain specific angle can it be removed from the motor axis.

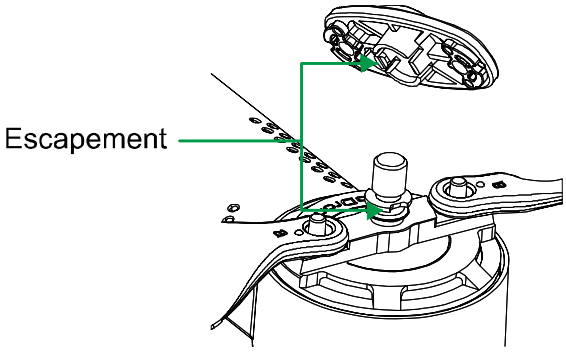


## Intelligent Battery

The capacity of the GDU SAGA intelligent battery is 12000 mAh, with a flight duration of 35min.

**Turning On/Off the Power Supply**

Short press the power switch and then hold it down for 2s to start up the power supply of aircraft; repeat the operation to turn off the power supply of aircraft.

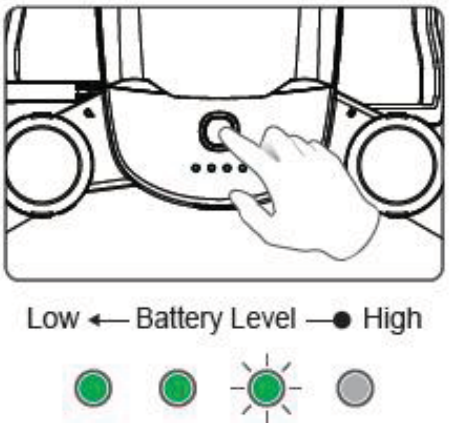


**Power Check**

Please remove the battery after turning off the aircraft. Short press the power switch once to check the battery capacity.

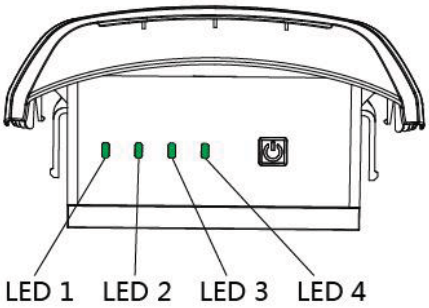


Power indicator light of intelligent battery

| LED1 | LED2 | LED3 | LED4 | Current power |
|---|---|---|---|---|
| Quick flashing | None | None | None | 0%~5% |
| Flashing | None | None | None | 6%~25% |
| Normally on | Flashing | None | None | 26%~50% |
| Normally on | Normally on | Flashing | None | 51%~75% |
| Normally on | Normally on | Normally on | Flashing | 76%~100% |
| Normally on | Normally on | Normally on | Normally on | 100% |

**Charge**

Please ‘remove the battery from the aircraft’ after turning off the aircraft, and connect to the specific charger to charge. The charging duration of the 12000mAh battery is within4 hours.

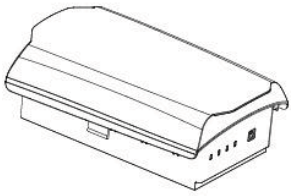

Input voltage: 100~240V

Charging duration: 12000mAh battery ≤4 hours

When charging the battery and remote control at the same time, the total charging duration of battery and remote control is within 5 hours.

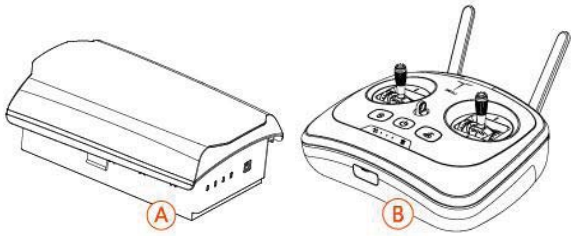


Input voltage: 100~240V

Charging duration: A+B≤5 hours

While charging, when the indicator light on the charger is red and normally on, it means it is charging; when the indicator light is green and normally on, it means it is charged up; if A and B are charging at the same time, when A or B is not full charged, it would be the red light that is normally on.

Charging indicator light of intelligent battery

| LED1 | LED2 | LED3 | LED4 | Current power |
|---|---|---|---|---|
| ● | ○ | ○ | ○ | 0%~25% |
| ● | ● | ○ | ○ | 25%~50% |
| ● | ● | ● | ○ | 50%~75% |
| ● | ● | ● | ● | 75%~100% |
| ○ | ○ | ○ | ○ | Fully charged |

※ **When the charger is connected with the battery, please charge according to the indicated directions of the icon on the battery. Do not insert upside down!**

**Removal and Installation of the Battery**

First, remove the battery cover and fasten the battery by locking the large battery into the aircraft battery bank and pressing on the front and back ends of the battery.

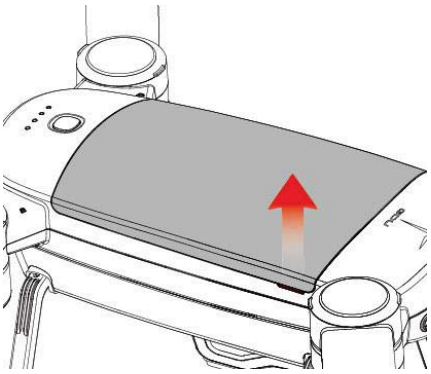

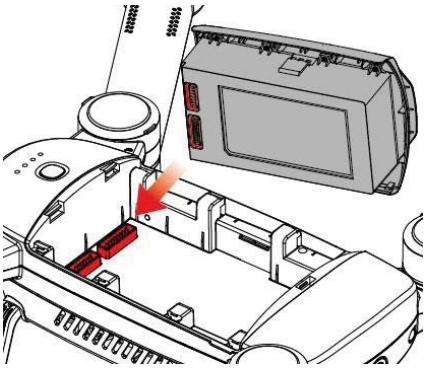

As shown in the figure, push the battery upwards at the same time to remove the battery.

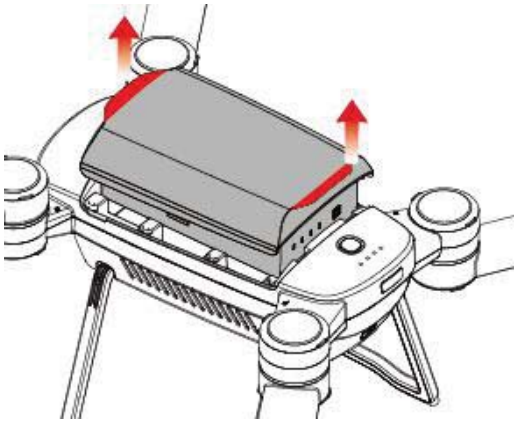

※ **Please insert or remove the battery when it is turned off. Remove the battery after the completing the flight.**

※ **Please make sure the battery cover/battery is fastened with the body tightly and seamlessly.**

※ **Batteries use dangerous chemicals. Please read the *Battery Safety Guide* carefully and precautions printed in the battery before use.**

# Remote Control

The remote control of SAGA uses an advanced automatic frequency hopping wireless communication system. Various operations and settings of the aircraft and camera can be controlled and utilized within 10km of the maximum communication distance by using the remote control. The user can stably place a mobile device in the remote control, and with the help of App, can view HD real-time pictures on their mobile terminal.

## Use of the Remote Control

### Switch On/Off and Power Check

Press and hold-down the start button of the remote control for 3s to turn on, and repeat the operation for 3s to turn off. After turning on the remote control, the color of the power switch light can represent the power of remote control, while the power indicator light on the remote control can represent the power of the aircraft.

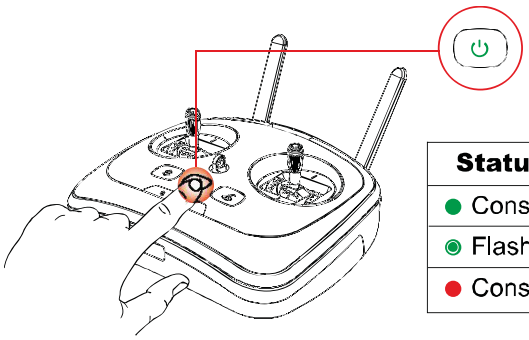

| Status of indicator | Current power |
|---|---|
| ● Constant of green light | 40%~100% |
| ◉ Flashing green light | 15%~40% |
| ● Constant of red light | 0%~15% |

### Remote Control Charging

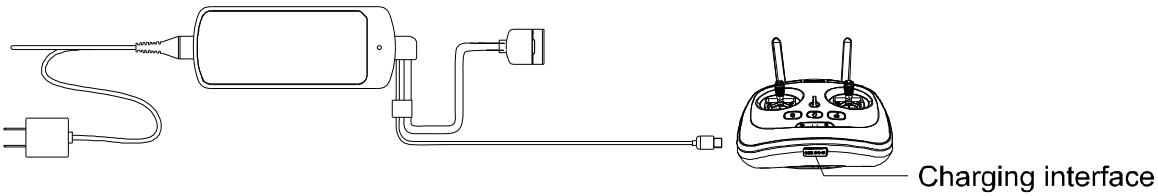


Please charge when the remote control is off. When charging the remote control, it can be determined whether it is charged up by the color of the indicator light. When the red light is normally on, it represents that charging is in progress, and when the green light is normally on, it represents a full battery. The charging duration of remote control is around 2.5 hours.

※ **Please make sure to use the original charger to charge the original battery and remote control. GDU is not responsible for product failures and damages due to the use of non-factory parts.**

## HD Image Transmission

Provided with HD image transmission module, SAGA can transmit 720P HD images in real time with a

transmission distance of 10km. During flight, the orientation of the antenna is required to be adjusted properly so that the aircraft can always be within optimal communication range.

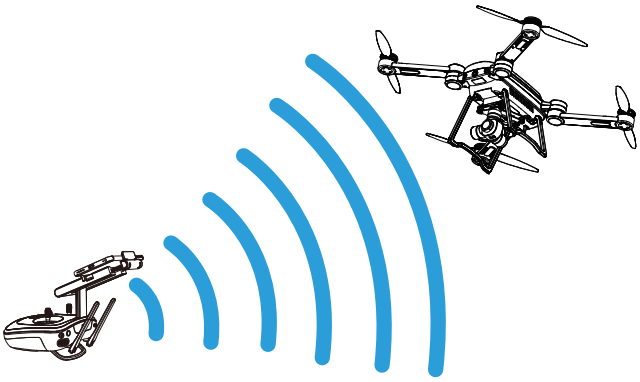

## Installation of Mobile Device

1. Please insert the support for the mobile device in the socket above the remote control;

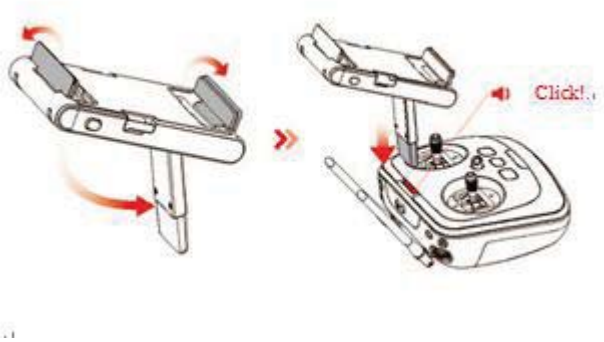


2. Press the limiter open and fix the electric equipment;

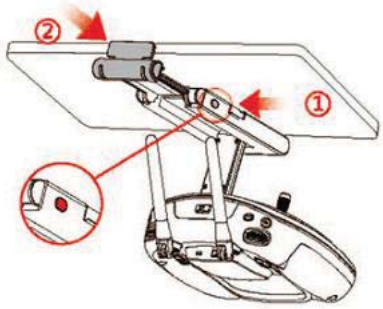


3. Please connect the mobile device with the remote control through the USB port.

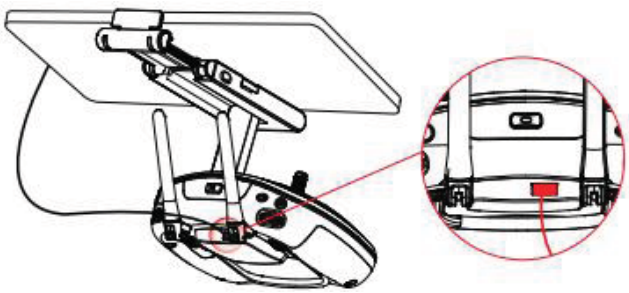

4. When disassembling, press “lock”, and pull the device support upwards.

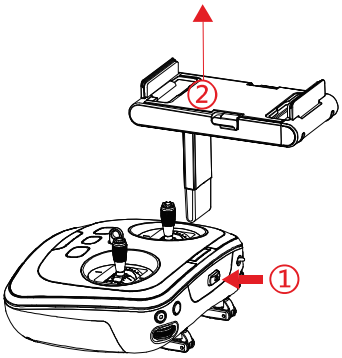


## Control of Aircraft

There are three operation modes supported by the remote control: American, Japanese, and Chinese. The stick controls of the three operation modes are defined as follows:

1. American: left stick- throttle, yaw/ right stick- pitching and roll.

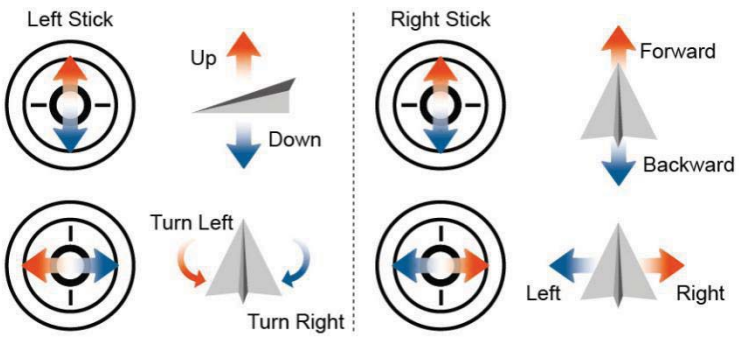


2. Japanese: left stick- pitching, yaw/ right stick- throttle and roll.

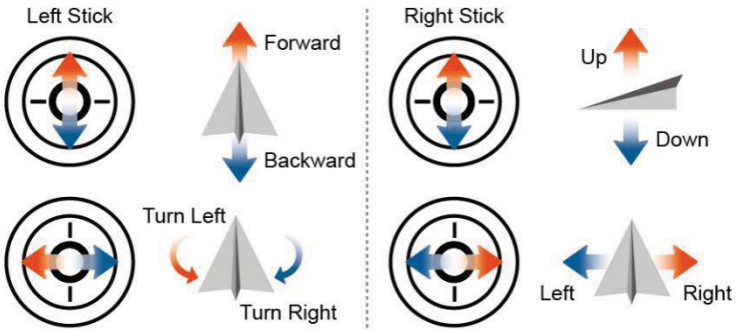


3. Chinese: left stick- pitching, roll/ right stick- throttle and yaw.

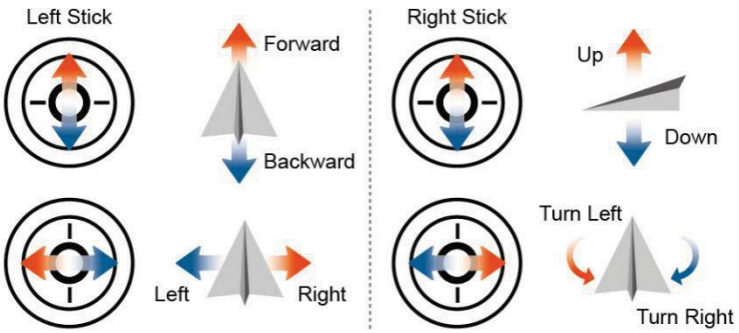


The operation mode of the remote control by default is “American”. You can change it by entering the “control settings” interface of the App or the remote control parameter adjustment software.

**Switching Flight Mode**

The flight mode of the aircraft can be switched through flight mode via the switch on the remote control. The switch is pushed to A mode (attitude mode), F mode (GPS sports mode), and P mode (GPS standard mode)

1. Standard GPS mode (P) (maximum horizontal flight speed: 5m/s)

GPS module and intelligent vision system are employed to enable precise hovering and intelligent flight of aircraft.

2. Sports GPS mode (F) (maximum horizontal flight speed: 15m/s)

The GPS module is employed to enable precise hovering. The handling sensitivity of the aircraft is adjusted and the maximum flight speed will be increased.

3. Attitude mode (A) (maximum horizontal flight speed: 15m/s)

The GPS and visual acoustic systems are not used for positioning while attitude stabilization is only provided.

Accurate positioning can be realized with GPS if there is a good GPS signal.

If there is a poor GPS signal, the intelligent vision system is then used for positioning when the light conditions satisfy such a system.

If there is a poor GPS signal and the light conditions cannot satisfy the intelligent vision system, the aircraft will be incapable of precise hovering and the App will prompt the user to land the aircraft.

# Camera Gimbal

## Overview of Gimbal

SAGA supports several gimbals. All use a brand-new attitude fusion control algorithm to build a highly accurate and 3-axial stabilized anti-shake gimbal so as to guarantee an accurate static attitude stability of ≤0.01°. Even if it is under violent flight conditions, its dynamic stability accuracy of ≤0.02° can be guaranteed to avoid camera shaking.

The image stabilization angle of the gimbal orientation and roll is -30°~+30°, with a pitch of -120°~+30° so as to guarantee stable use of the gimbal during the various maneuvering processes of the aircraft. In addition, the remote control can control the gimbal's pitch with the angle adjustment of -90°~0°. Users can change perspectives quickly.

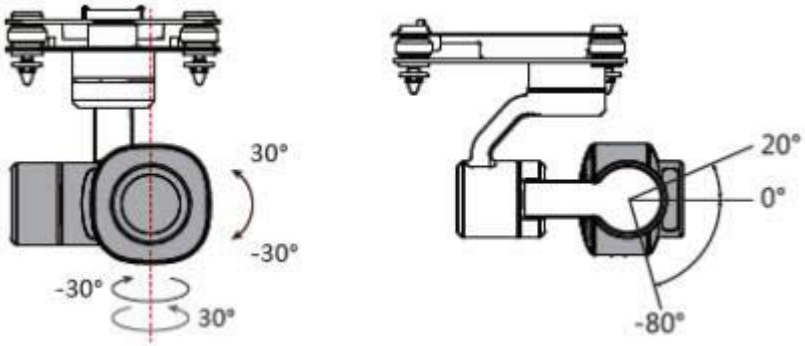


※ **Please place the aircraft on a flat and broad surface before takeoff and make sure that the gimbal doesn't touch any object beforehand.**

※ **When the aircraft is on an uneven surface or grassland and an object touches the gimbal or the gimbal is subject to great external force, the motor of the gimbal might lock and abnormal conditions may occur.**

※ **After the start-up of gimbal, there might be a short vibration prompt tone, which is a normal. At that moment, please don't use the gimbal.**

※ **Temporary failure of condensation may occur when flying in heavy fog or clouds. If this condition occurs, the gimbal can return to normal after drying.**

## Install the Stands

Please install the stands on the aircraft.

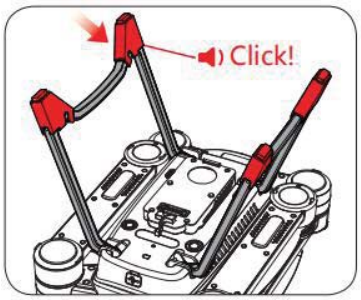

## Installation of Camera Gimbal

1 Please remove the protection cover of the lens and gimbal support;

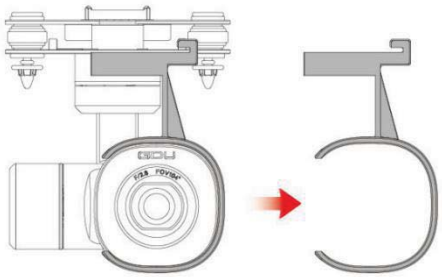

2 Please insert the Micro SD card according to the locations shown on gimbal;

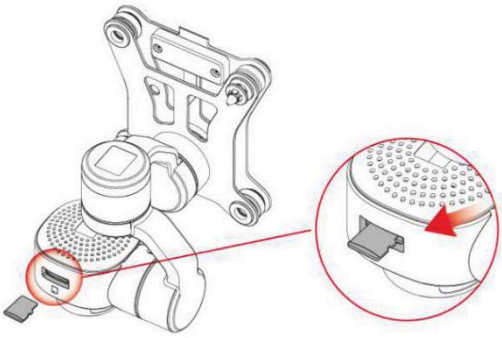

3 Please insert the clip in front of the gimbal into the fixed plate;

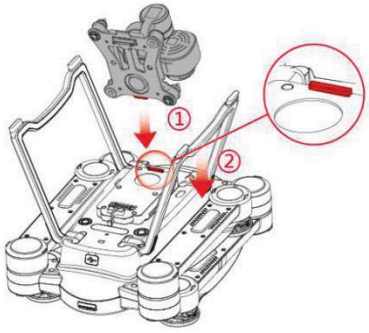


4 Please pull the lock catch of the gimbal backwards and clamp the gimbal downwards.

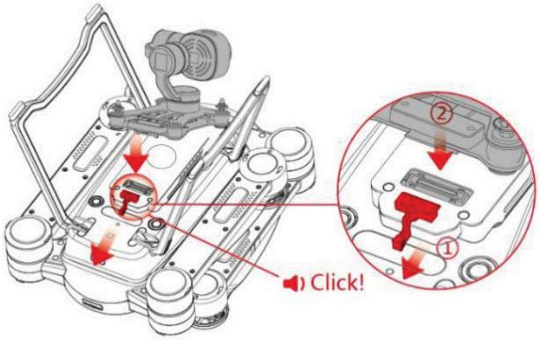


※ **The protection cover for the gimbal can be used to protect the gimbal camera when carrying. Please confirm that the cover is removed when using the aircraft.**

※ **It is suggested to put on the protection cover for the gimbal so as to protect the gimbal camera when the gimbal is not used.**

※ **Please insert and pull out the SD card after the power supply for the aircraft is disconnected**

※ **Before removing the gimbal, it is required to turn off the power source of the aircraft.**

## Control of Camera Gimbal

The thumbwheel on the left of the remote control controls the yaw of the gimbal; the thumbwheel on the right of the remote control controls the pitch of the gimbal;

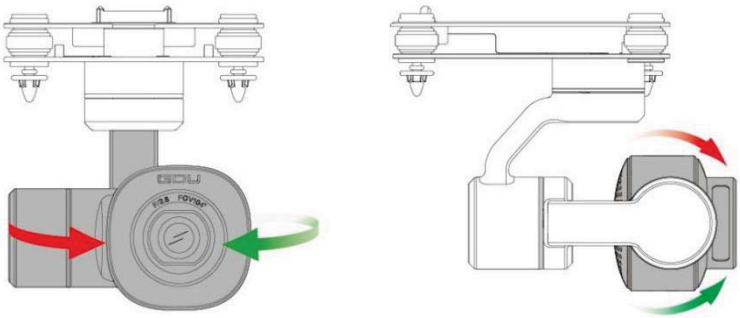

Taking pictures, video recording, and gimbal re-centering can be done by clicking the operation button; C1 and C2 buttons can be user-defined in the App according to your demand.

※ **The camera gimbal model in the figure is only for graphic purposes. According to the different configurations of the products, the camera gimbals carried are different.**

# GDU Flight App

The GDU Flight App is an application for SAGA. Users can handle the aircraft, gimbal, and camera through this App so as to enable functions such as flight control, picture taking and video recording, route planning, parameter setting, and sharing.

The App is divided into three modules: device, media, and mine.

※ **The interface and function of the App will continue to be updated. It shall be subjected to the latest version.**

## Device

Functions on the device page: real-time flight weather, viewing of indexes suitable for the flight, appearance display of the aircraft, and connection status of the aircraft. Click the preparation of picture taking button to get into the camera interface.

※ **The main interface displayed will be slightly different depending on the mount.**

**Camera interface**

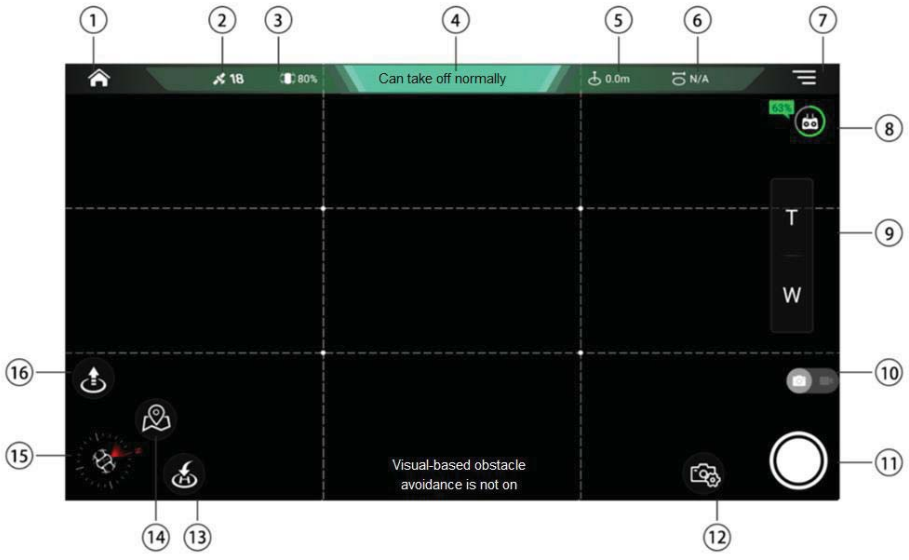


① Return to the homepage

Click “return” to the App device page.

② GPS status

Display GPS satellite search number.

③ Power of aircraft

Display the residual power of aircraft.

④ Connection status of aircraft

Can take off normally Display the connection status of aircraft.

⑤ Flight height

Display current flight height.

⑥ Flight distance

Display current flight distance.

⑦ Settings

Click to get into the system setting interface of the aircraft, including control settings, flight settings, general settings, and camera settings.

⑧ Power of remote control

Display the residual power of the remote control.

⑨ Zoom

T

W Use the camera's zoom.

⑩ Switch picture taking/video recording

Click to switch between current picture taking/video recording mode.

⑪ Key of picture taking/video recording

/ Display current functions: picture taking/video recording.

⑫ Camera settings

Click to unfold camera function parameter settings for user-defined setup.

⑬ One-click return

The aircraft makes a return voyage and lands after clicking.

⑭ Switch to the map

Switch to the map interface by clicking

⑮ Compass

Display current orientation and the direction of the nose.

⑯ One-click takeoff/ landing

/ Display takeoff key before taking off; display landing key after taking off.

**Map Interface**

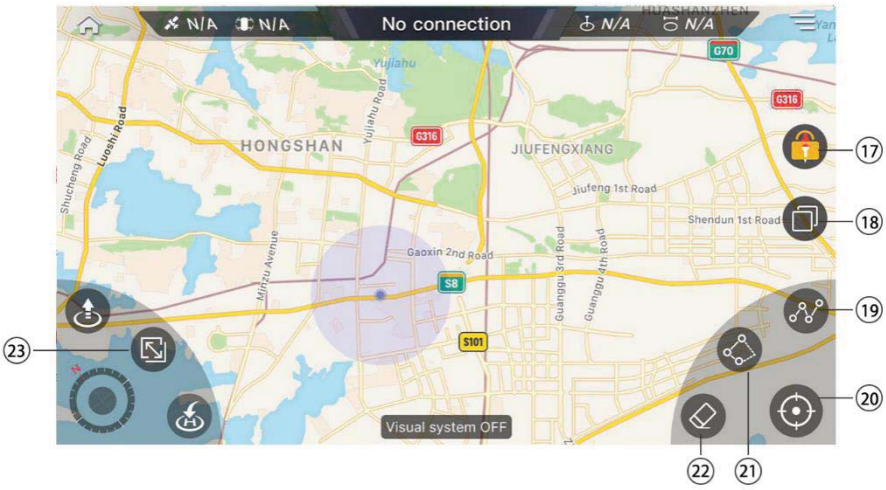


⑰ Direction locking

Can lock the map direction of a mobile device.

⑱ Switch to the map

Click to change display patterns of the map between 2D and satellite maps.

⑲ Route planning

Click to start the track planning function, set the track point and upload it successfully. Then the aircraft will fly to the track point in order.

⑳ Positioning

Click to locate current location

㉑ Electronic fencing

The aircraft can fly safely within the electronic fencing.

㉒ Elimination

Click to eliminate the track point or electronic fencing on map page that are not uploaded.

㉓ Switch to the camera interface

Click to switch to the camera interface

**Settings:**

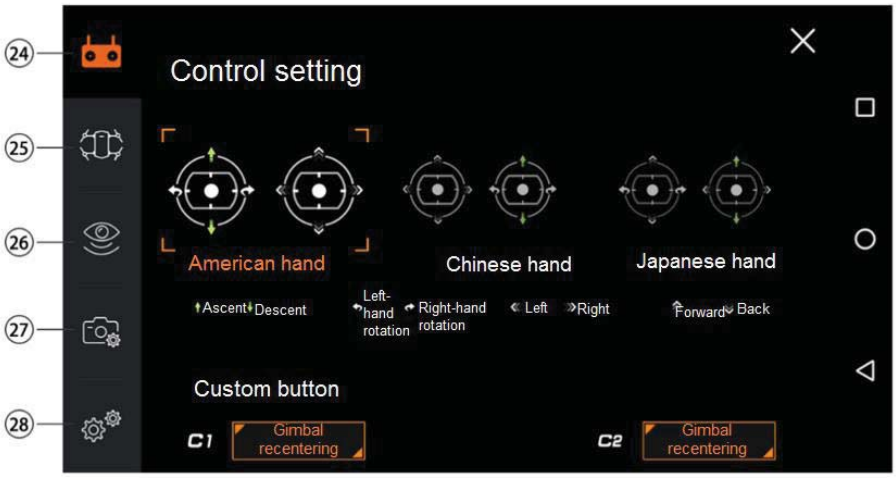


㉔ Control setting

Be able to switch the type of control, custom C1\C2 key, etc.

㉕ Flight setting

Be able to set up the height limit, distance limit, course reversal height, etc.

㉖ Sense setting

Be able to open visual-based obstacle avoidance, display radar map, etc.

㉗ Camera setting

Be able to set up the resolution ratio of video/picture, storage capacity, etc.

㉘ General setting

Be able to set up grid effect, calibration of magnetometer, viewing of aircraft information, etc.

※ **The interface language of the App can be kept consistent with the system language of the mobile device. If it is required to change the interface language, please change the system language of the mobile device Presently, the interface language only supports simplified Chinese and English with other language packages to be added later. It shall be subject to the latest version.**

# Flight

## Inspection before Flight

- Inspect carefully whether each part of the aircraft is complete or not. If there is a crack or other damage, please stop the flight.
- Inspect whether the battery, remote control, and mobile device are all charged up.
- Make sure that the arms and landing gears are unfolded in place, and the propellers are installed firmly.
- Make sure that the remote control is connected with the aircraft normally.
- Inspect whether all firmware are the latest and the App is connected with the remote control normally.
- Make sure that “able to fly normally” displays on the camera interface of the App.
- Inspect whether both the motor and the gimbal operate normally after the aircraft starts.

## Calibration of Magnetometer

Please select an open site and calibrate the magnetometer according to the following steps. If it is required to view more information about the calibration of magnetometer, please watch the relevant instructional videos.

1) After starting up the remote control and the aircraft, the aircraft will automatically inspect itself signified by the beeping.

Method 1 to calibrate the magnetometer: After the beeping stops, please toggle the “switch flight mode” of the remote control back and forth a few times. When the yellow light on the tail is normally on, stop toggling; the magnetometer calibration mode is activated.

Method 2 to calibrate the magnetometer:

After the beeping stops, please operate the App, by clicking “preparation of shooting”, and click this

"setting" icon to select "general setting" or click "the connection status of the aircraft is able to take off normally" Can take off normally, enter the interface and click "calibration of the magnetometer"; when the tail indicator light is yellow light that is normally on, enter the magnetometer calibration mode.

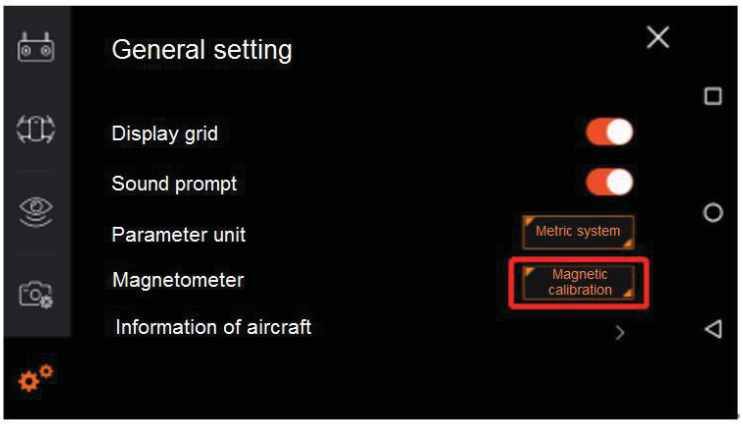

2) Begin to calibrate magnetometer, put the belly upward, and rotate the aircraft horizontally and clockwise; if the yellow light flashes, the aircraft isn't horizontal. When the white light flashes on the tail, the calibration of magnetometer is successful horizontally, and the user should continue to the next step;

3) Hold the aircraft by hand, the nose faces downwards, flashing white light at the tail turns to be white light that is normally on, then the aircraft is rotated vertically and clockwise. When the green light is normally on at the tail, the vertical calibration of the magnetometer is successful , resulting in a successful magnetometer calibration.

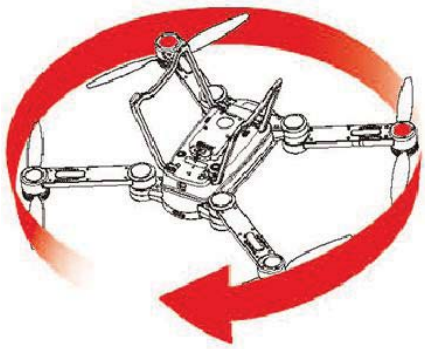

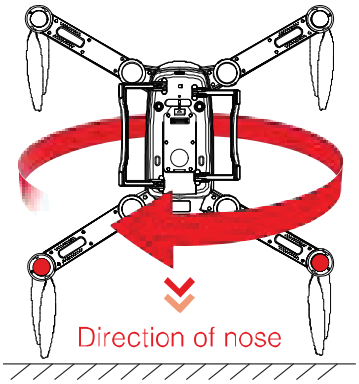


Description on the status of indicator:

| | Status description | Rear LED Indicator | Front LED Indicator |
|---|---|---|---|
| Calibration of magnetometer | Under level calibration mode | ● Yellow-normally on | ● Yellow-normally on |
| | Non-horizontal aircraft | ● Yellow-normally on | ◉ Yellow-quick flashing |
| | Successful level calibration | ● Yellow-normally on | ◎ White-quick flashing |
| | Under vertical calibration mode | ● Yellow-normally on | ○ White-normally on |
| | Successful vertical calibration (successful calibration) | ● Red-normally on | ● Green-normally on |

※ **Please don't move the aircraft during the self-inspection.**

※ **For initial use or flight zones with great spatial variations, please carry out the calibration of magnetometer, otherwise there is no way to unlock for the flight.**

※ **Please carry out the calibration of magnetometer if serious drifting occurs during the flight, or it is not a straight flight.**

※ **Please do not carry out the calibration of magnetometer indoors, nearby large metal objects or at places with strong current and magnetic field interference.**

※ **Please do not carry a phone, watch, key/s and other metal objects during the calibration of magnetometer.**

## Basic Flight

Select a flat and open surface, turn on the power source of the aircraft, and calibrate magnetometer successfully. After this, the indicator of the aircraft is green light. Place the aircraft horizontally with the tail facing the user.

**Takeoff/Landing**

Takeoff: Press and hold the "One Click Launch" button 3s on the remote control (or click "one-key takeoff" icon on the App), and the aircraft will take off to a height of 1.5 meters;

or ②Pull the control sticks down inwards to unlock the aircraft ,then push left stick to take off .

Landing: ① Press or click “one-key to return” key on remote control or the icon on the App .

or ②Pull the throttle lever downwards to ground the aircraft and wait 2 seconds for the motor to stop .

When the flight is completed turn off the aircraft and then the remote control.

※ **Before takeoff, users should face the tail and over 5m away from the place where the aircraft is placed.**

※ **Please do not unlock and take off on a slope with a great angle.**

# Technical Parameters

- **Aircraft**

| | |
|---|---|
| Weight | About 2400g (without load) |
| Maximum load | 1000g |
| Maximum takeoff weight | 3400g |
| Maximum ascending velocity | 5 m/s (sports mode) |
| Maximum descending velocity | 3 m/s |
| Maximum horizontal flight speed | 15m/s (sports, there is no wind nearby the sea level) |
| Maximum altitude flight height | 3500 m |
| Maximum flight time | 35 minutes (without wind) |
| Operating ambient temperature | -10°C to 50°C |
| Satellite positioning module | GPS/GLONASS dual mode |

- **Gimbal**

| | |
|---|---|
| Model of gimbal that can be carried | 4K, 4K*30X, infrared gimbal, etc.; |
| Controllable rotating scope | Pitch: -120°~+30°;<br>Roll: -30°~+30°;<br>Yaw: -30°~+30° |

- **Forward Vision System**

| | |
|---|---|
| Sense range | 0.5 to 15 m |
| Operating environment | The surface texture and sunlight are adequate (>15 lux, normal irradiation environment of indoor fluorescent lamp) |

- **Downward Vision System**

| | |
|---|---|
| Measuring range of speed | Flight speed ≤10m/S (height 8m, abundant sunlight) |
| Accurate suspension range | 0.3 to 8 m |
| Operating environment | The surface texture and sunlight are adequate (>15 lux, normal irradiation environment of indoor fluorescent lamp) |

- **Load**

**4K camera gimbal**

| | |
|---|---|
| Image sensor | 1/2.3inch CMOS, effective pixels: 12.4 megapixels |
| Lens | FOV 104°, 35mm equivalent focal length 24mm F/2.8 |
| Distortion | <27% |
| ISO range | Auto 100-1600 |
| Electronic shutter speed | Auto |
| Maximum resolution of pictures | 4000*3000 |
| Video resolution | 4096*2160/@24fps |
| Picture format | JPG |
| Video format | MP4 |
| Storage | Support Micro SD card (32G maximum) |
| Weight | 249g |

**10X Gimbal**

| | |
|---|---|
| Image sensor | 1/2.3inch CMOS, effective pixels: 16.35 megapixels |
| Lens | FOV:W: 62°; T: 6.6°; focal length: 4.7~47mm |
| ISO range | 50-3200(photo); 50-1600(video) |
| Electronic shutter speed | auto |

| | |
|---|---|
| Maximum resolution of pictures | 4608*3456 |
| Video resolution | 3840*2160/25fps |
| Picture format | JPG |
| Video format | MP4 |
| Storage | Supports Micro SD card (64G maximum) |
| Weight | <440g |
| **30X Gimbal** | |
| Image sensor | 1/2.3inch CMOS, effective pixels: 12.4 megapixels |
| Lens | FOV:W: 68.4°; T: 2.67°; focal length: 6~180mm |
| Distortion | W:-1.08%, T:0.29% |
| ISO range | Adjustable/automatic: 100-3200(photo); 100-3200(video) |
| Electronic shutter speed | Adjustable/automatic 1~1/6000s |
| Maximum resolution of pictures | 4000*3000 |
| Video resolution | 4096*2160 @30fps |
| Picture format | JPEG |
| Video format | MP4 |
| Storage | Support Micro SD card (128G maximum) |
| Weight | < 720g |
| **Infrared Camera Gimbal (800*600)** | |
| Image sensor | 17um infrared detector, 8~14um, bad point≤1%, and NETD≤50mK |
| Lens | FOV: 39°*29°; focal length: 20mm F1.2 electric lens |
| Range of temperature measurement | -20℃ - 50℃ |
| Thermal sensitivity | Ambient temperature: 23°±5°, thermal sensitivity ≤0.05K when the relative aperture is 1. |
| Accuracy of temperature measurement | ±2° or ±2% (make sure the working temperature range of the accuracy is: -10°C~50°C, 10m temperature adjustment when it is normal temperature, and 5m temperature adjustment when it is high or low temperature) |
| Maximum resolution of pictures | 800*600 |

| | |
|---|---|
| Video resolution | 800*600@25fps |
| Picture format | JPEG |
| Video format | MP4, irgd |
| Storage | Supports Micro SD card (128G maximum) |
| Weight | <440g |

- **Remote Control**

| | |
|---|---|
| Working frequency | 2.4GHz/5.8GHz |
| Effective signal distance | 10km |
| Operating ambient temperature | -10°C to 40°C |
| Battery | 5000mAh |
| Working voltage | 7.4V |
| Interface type: | Type A USB |

- **Charger**

| | |
|---|---|
| Power | 16.8 V |
| Rated power | 68 W |

- **Intelligent Battery**

| | |
|---|---|
| Capacity | 12000 mAh |
| Power | 14.8 V |
| Battery type | LiPo 4S |
| Energy | 177.6Wh |
| Overall battery weight | About 1078g |

# Certification Information

FCC Compliance

This equipment has been tested and found to comply with the limits of a Class B digital device, pursuant to Part 15 of the FCC Rules. These limits are designed to provide reasonable protection against harmful interference in a residential installation. This equipment generates uses and can radiate radio frequency energy and, if not installed or used in accordance with the instructions, may cause harmful interference to radio communications. However, there is no guarantee that interference will not occur with a particular installation. If this equipment does cause harmful interference to radio or television reception, as can be determined by turning the equipment

in question off and on, the user is encouraged to try to correct the interference by one or more of the following measures:

-- Reorient or relocate the receiving antenna.

-- Increase the separation between the equipment and receiver.

-- Connect the equipment into an outlet on a circuit different from that to which the receiver is connected.

-- Consult the dealer or an experienced radio/TV technician for help.

Changes or modifications not expressly approved by the party responsible for compliance could void the user's authority to operate the equipment.

This device complies with part 15 of the FCC Rules. Operation is subject to the following two conditions: (1) This device may not cause harmful interference, and (2) this device must accept any interference received, including interference that may cause undesired operation.

GDU SAGA

The antenna(s) used for this transmitter must be installed to provide a separation distance of at least 20 cm from all persons and must not be co-located or operating in conjunction with any other antenna or transmitter. This equipment complies with FCC radiation exposure limits set forth for an uncontrolled environment. The end user must follow the specific operating instructions for satisfying radio frequency exposure compliance. This transmitter must not be co-located or operating in conjunction with any other antenna or transmitter.

GDU Remote controller

The portable device is designed to meet the requirements for exposure to radio waves as established by the Federal Communications Commission (USA). These requirements set an SAR limit of 1.6 W averaged over one gram of tissue. The highest SAR value reported under this standard during product certification for use when properly worn on the body. PowerRay Standard

Controller: The maximum measured body SAR value is: 0.19W/kg (2.4G) and 0.07W/kg(5.8G)