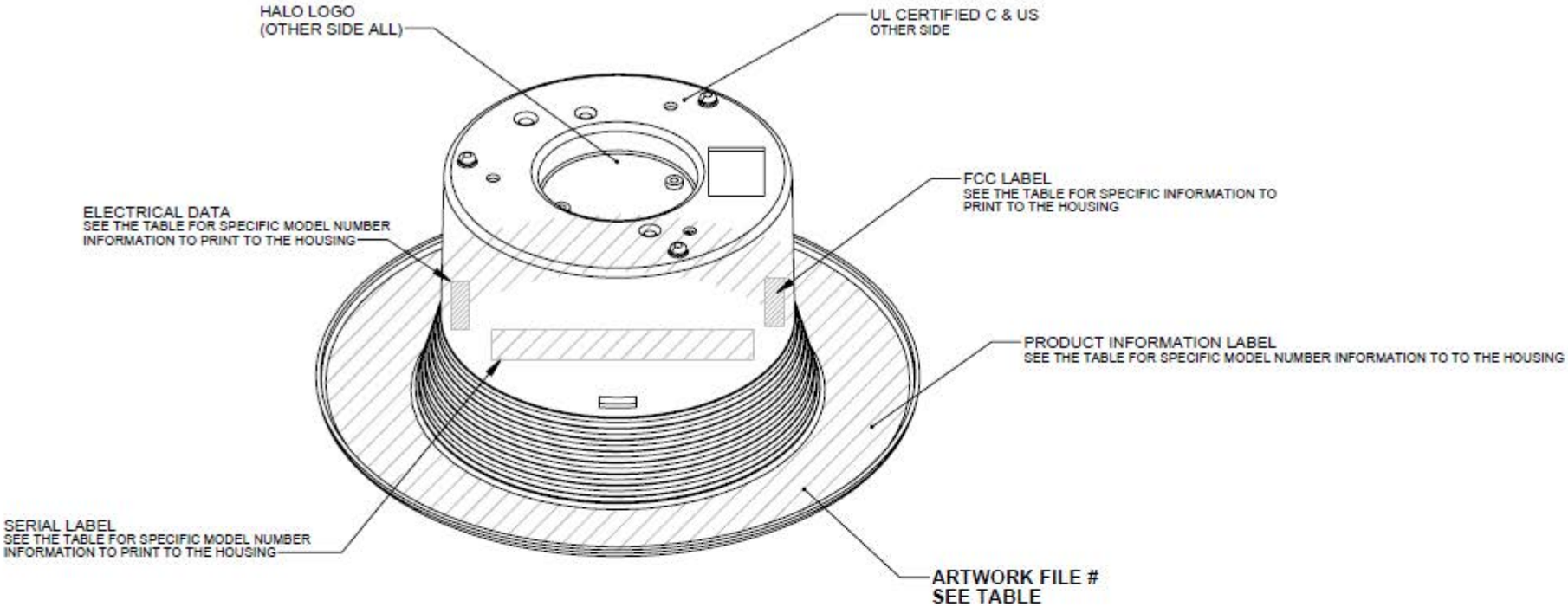

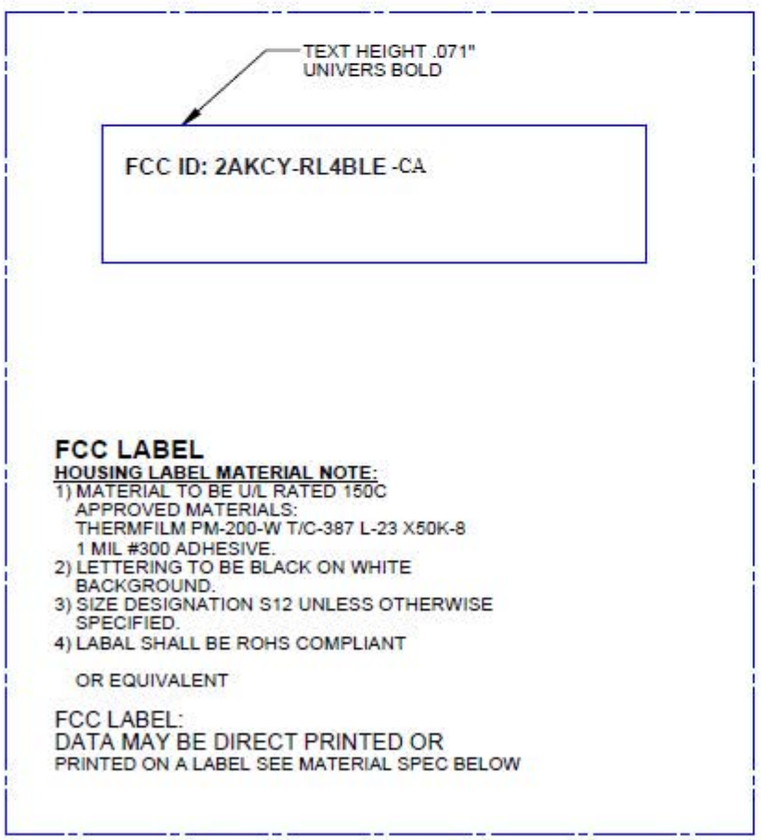

FCC LABEL

HOUSING LABEL MATERIAL NOTE:

1) MATERIAL TO BE U/L RATED 150C
   APPROVED MATERIALS:
   THERMFILM PM-200-W T/C-387 L-23 X50K-8
   1 MIL #300 ADHESIVE.
2) LETTERING TO BE BLACK ON WHITE
   BACKGROUND.
3) SIZE DESIGNATION S12 UNLESS OTHERWISE
   SPECIFIED.
4) LABAL SHALL BE ROHS COMPLIANT

   OR EQUIVALENT

FCC LABEL:
DATA MAY BE DIRECT PRINTED OR
PRINTED ON A LABEL SEE MATERIAL SPEC BELOW