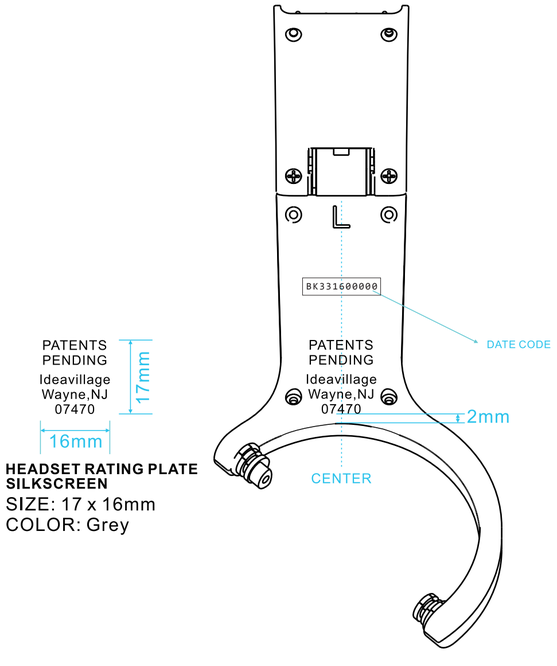

HEADSET RATING PLATE SILKSCREEN
SIZE: 17 x 16mm
COLOR: Grey

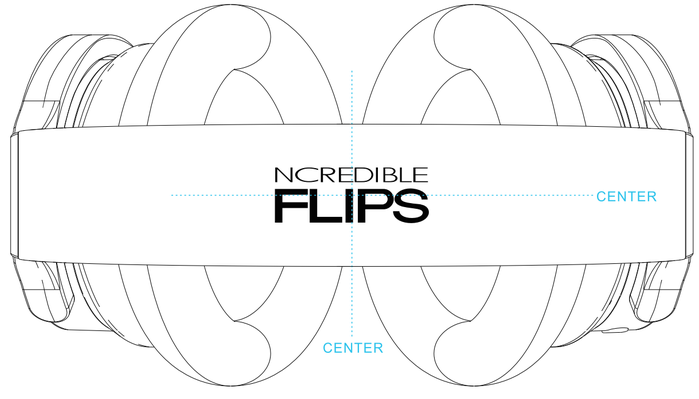

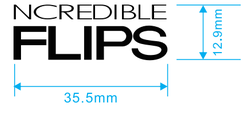

HEADSET
SILKSCREEN
SIZE: 35.5 x 8mm

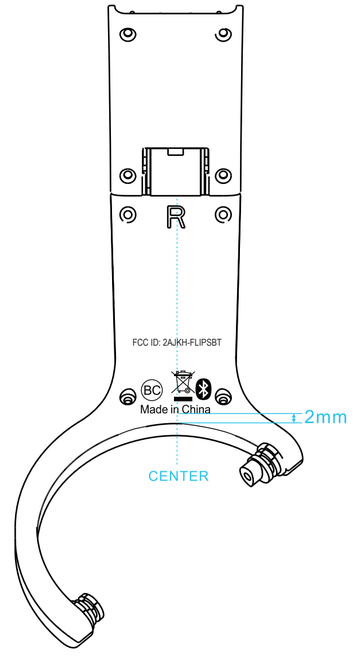

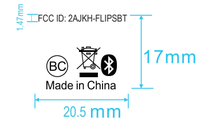
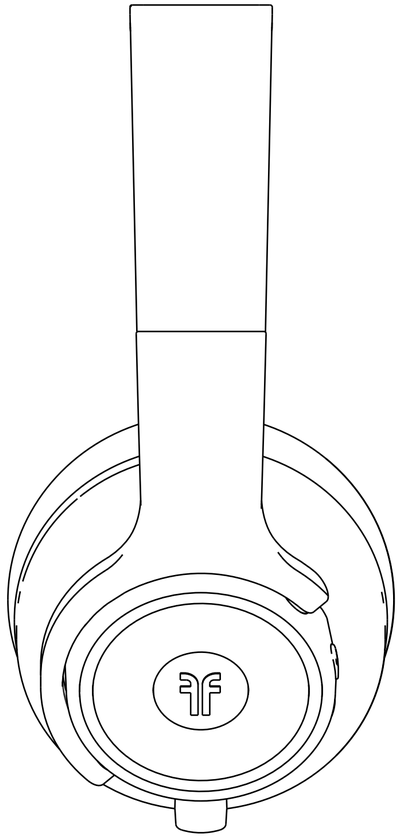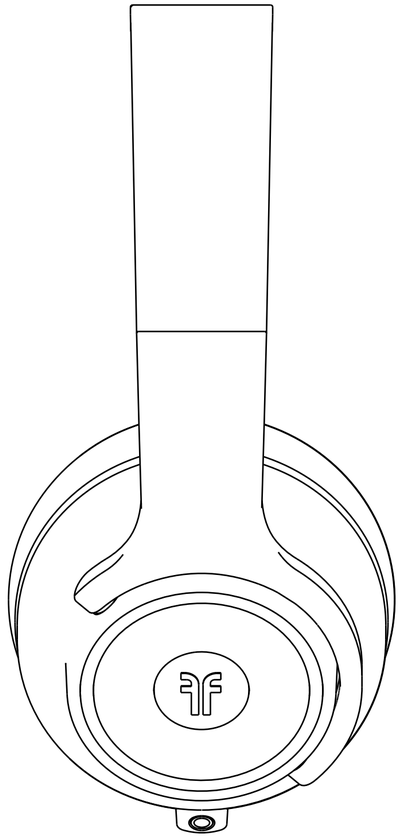
HEADSET RATING PLATE SILKSCREEN
SIZE: 16.2 x 17mm
COLOR: Grey