FCC ID:2AJE7SMC-WEX01

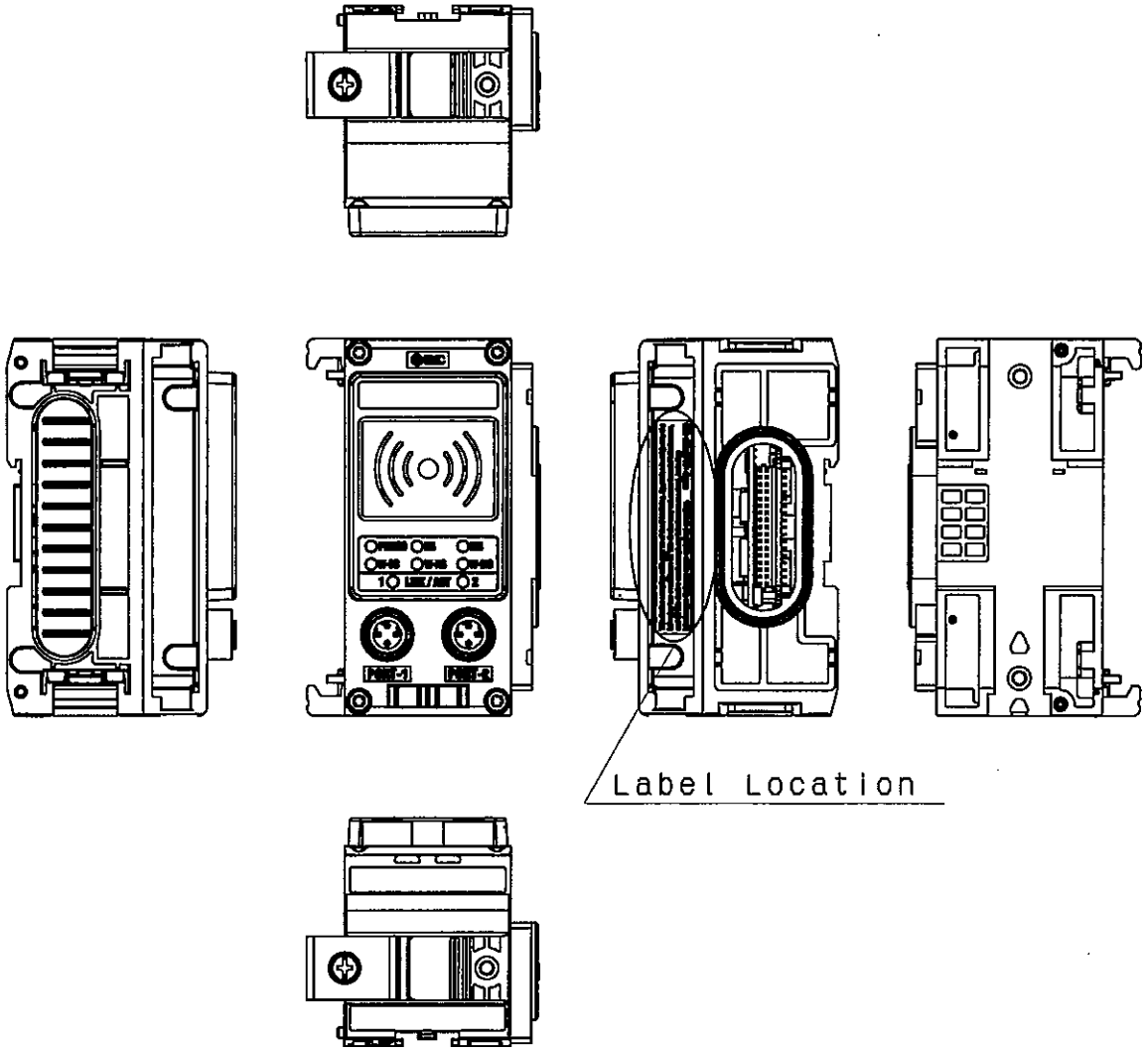

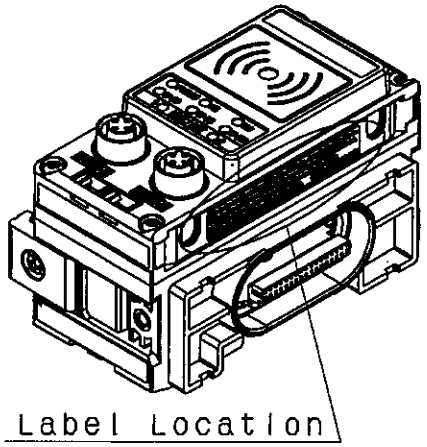

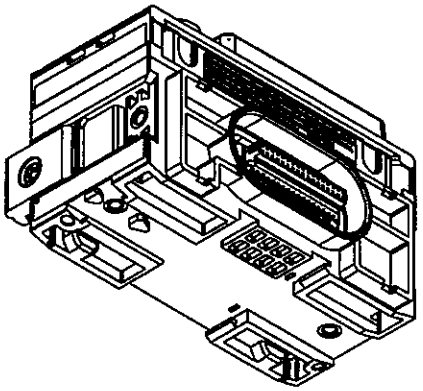

3D Model

※Label material: C110C, (Polycarbonate)

The FCC ID label is permanently affixed on the device with an acrylic type adhesive.
(Refer to FCC label drawing (P5744-111) for details.)

REV	QTY	DESCRIPTION	DATE	PREPARED	REV NO

TOLERANCES JIS B 0405			
RANGE(mm)	GRADE f ±	m ±	c ±
0.5≤D≤3	0.05	0.1	0.2
3<D≤6	0.05	0.1	0.3
6<D≤30	0.1	0.2	0.5
30<D≤120	0.15	0.3	0.8
120<D≤400	0.2	0.5	1.2
400<D≤1000	0.3	0.8	2
1000<D≤2000	0.5	1.2	3

DRAWN	C.Shirod	
DATE	2016-10-14	
DESIGNED	K.Kunii	
DATE	2016-10-14	
CHECKED		
DATE		
APPROVED		
DATE		

SCALE :

DWG NAME: FCC ID Label Location

DWG NO: Wireless Master unit(EX600-WEN1/2)

REVISION

FINISH
PAINT
MASS
PACKING
MATERIAL
MATERIAL SIZE

MODEL | QTY

THIRD ANGLE

DWG NAME | DWG REC | DWG ID

SMC Corporation

FINISH:表面処理 / PAINT:塗装 / MASS:質量
PACKING:包装区分 / MATERIAL:材質
MATERIAL SIZE:材料寸法

A2-V06

FCC ID:2AJE7SMC-WEX01

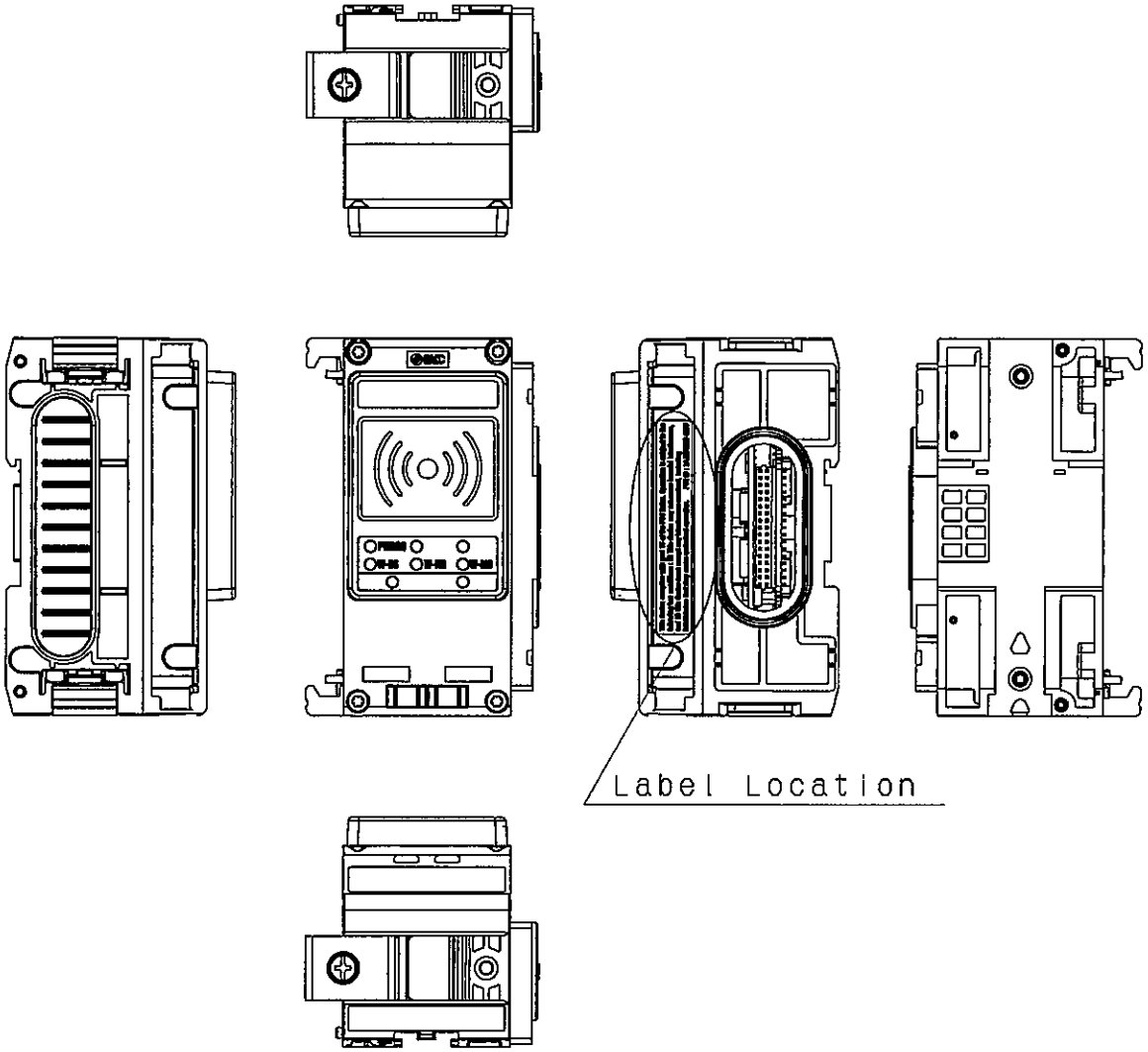

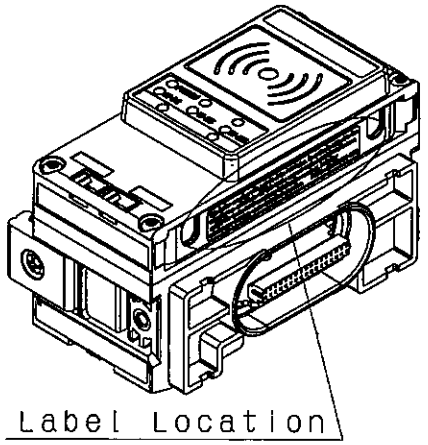

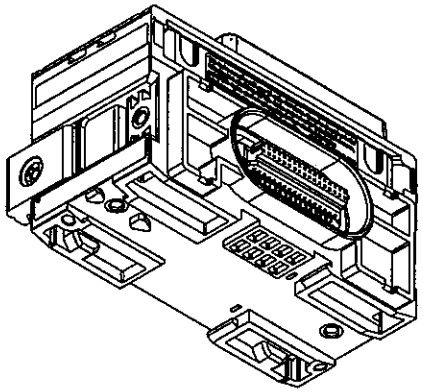

3D Model

※Label material: C110C, (Polycarbonate)

The FCC ID label is permanently affixed on the device with an acrylic type adhesive.
(Refer to FCC label drawing (P5744-111) for details.)

REV	QTY	DESCRIPTION	DATE	PREPARED	REV NO

FINISH
PAINT
MASS
PACKING
MATERIAL
MATERIAL SIZE

MODEL	QTY
THIRD ANGLE	

TOLERANCES JIS B 0405			
RANGE(mm)	GRADE f	m	c
0.5≤D≤3	±0.05	±0.1	±0.2
3<D≤6	±0.05	±0.1	±0.3
6<D≤30	±0.1	±0.2	±0.5
30<D≤120	±0.15	±0.3	±0.8
120<D≤400	±0.2	±0.5	±1.2
400<D≤1000	±0.3	±0.8	±2
1000<D≤2000	±0.5	±1.2	±3

DRAWN	C.Shiroo	2016-10-14
DESIGNED	K.Kunii	2016-10-14
CHECKED		
APPROVED		

SCALE :

DWG NAME: FCC ID Label Location

DWG NO: Wireless Slave unit(EX600-WSV1/2)

REVISION

DWG REC

DWG ID

SMC Corporation

FINISH:表面処理 / PAINT:塗装 / MASS:質量
PACKING:包装区分 / MATERIAL:材料
MATERIAL SIZE:材料寸法

DWG NAME

A2-V06