CSA C22.2 No. 0.15, “Adhesive Labels”
ANSI/UL 969

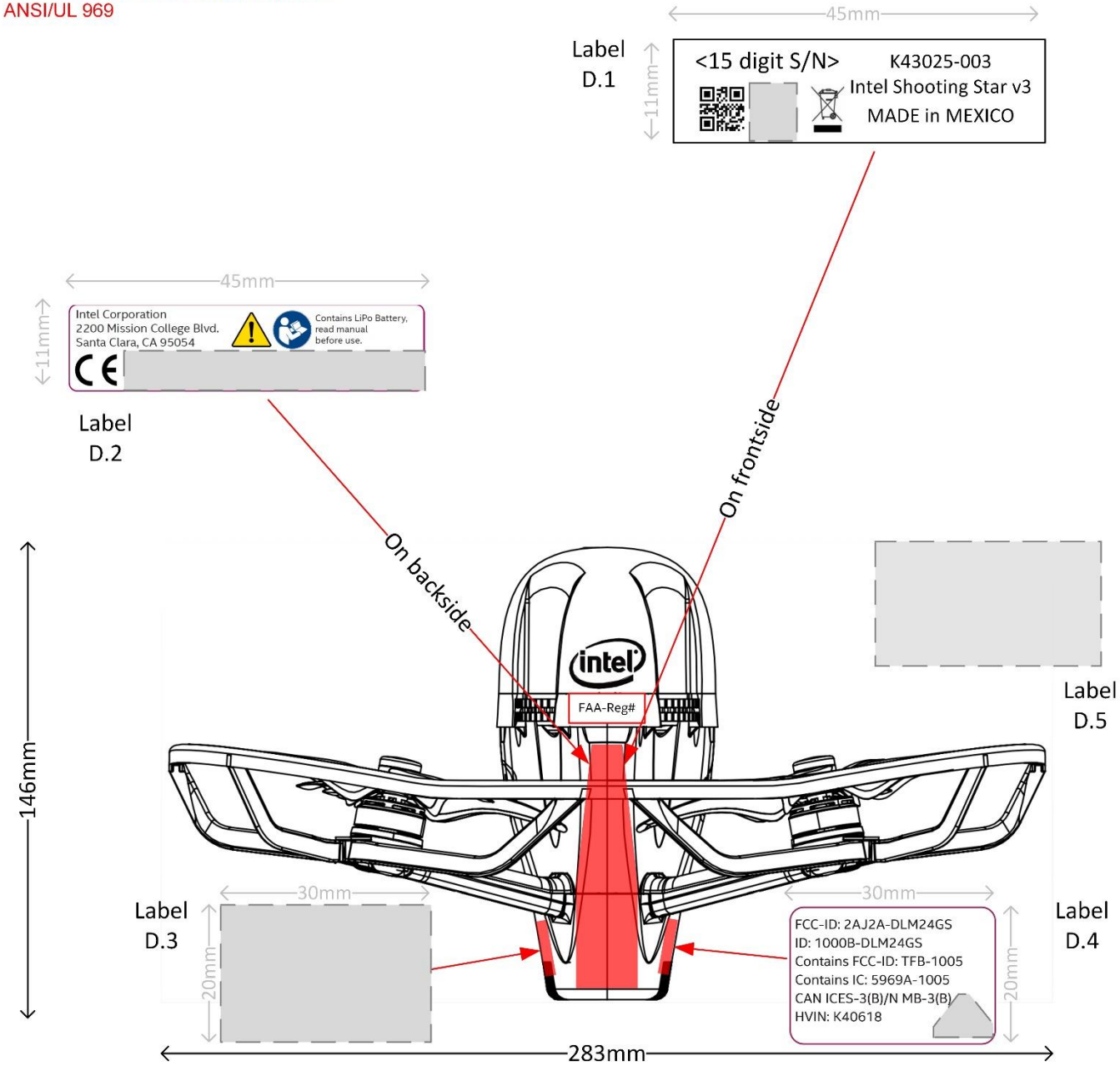

Intel SHOOTING STAR v3 – Drone Label/Label Location	Rev. 7B	Release	06-2020	Dr. Andreas Gäde-Tsangas	MM# 99A3RT