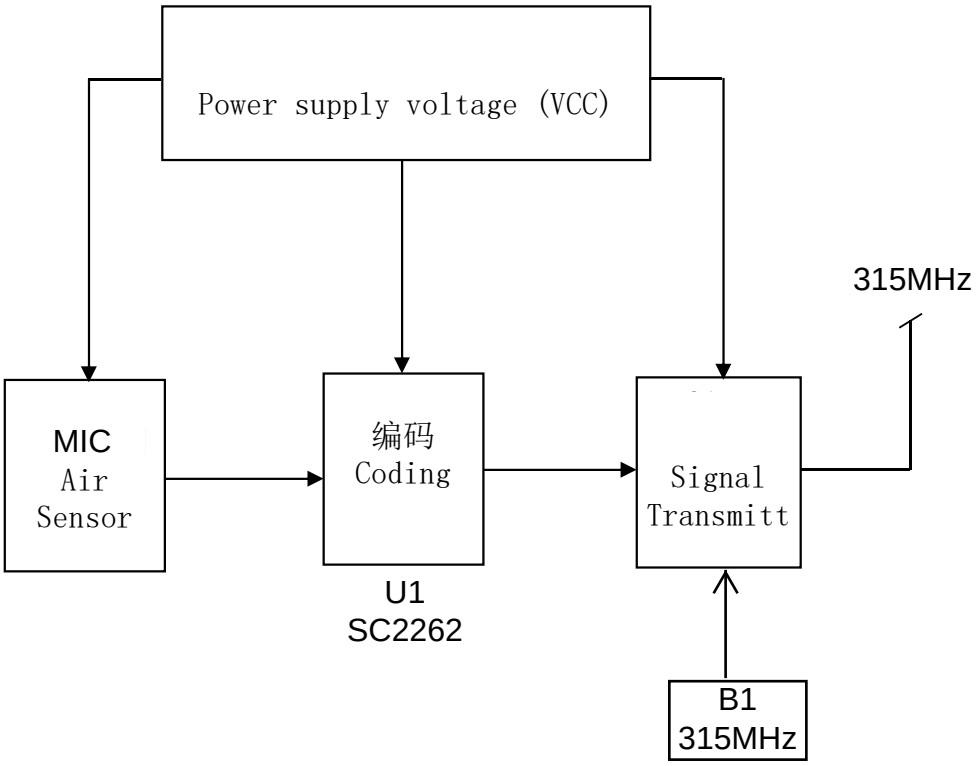
Power supply voltage (VCC)
315MHz
MIC
Air
Sensor
编码
Coding
Signal
Transmitt
U1
SC2262
B1
315MHz