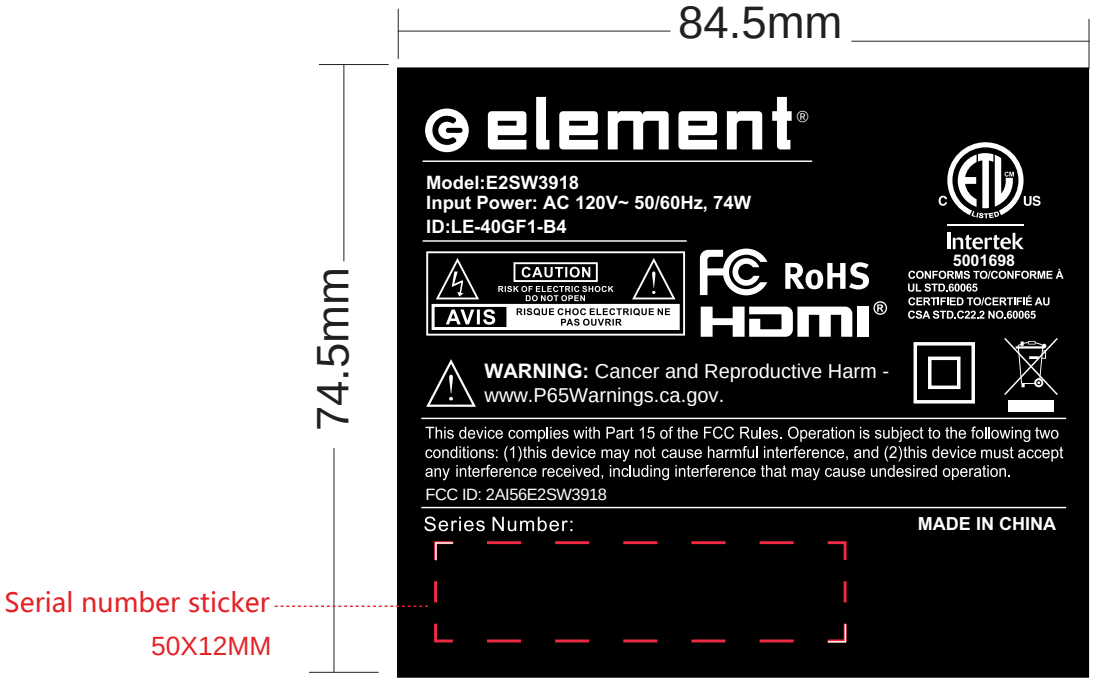
84.5mm
74.5mm
element
Model:E2SW3918
Input Power: AC 120V~ 50/60Hz, 74W
ID:LE-40GF1-B4
CAUTION
RISK OF ELECTRIC SHOCK
DO NOT OPEN
AVIS
RISQUE CHOC ELECTRIQUE NE
PAS OUVRIR
FC RoHS
HDMI®
C US
Intertek
5001698
CONFORMS TO/CONFORME À
UL STD.60065
CERTIFIED TO/CERTIFIÉ AU
CSA STD.C22.2 NO.60065
WARNING: Cancer and Reproductive Harm -
www.P65Warnings.ca.gov.
This device complies with Part 15 of the FCC Rules. Operation is subject to the following two conditions: (1)this device may not cause harmful interference, and (2)this device must accept any interference received, including interference that may cause undesired operation.
FCC ID: 2AI56E2SW3918
Series Number:
MADE IN CHINA
Serial number sticker
50X12MM

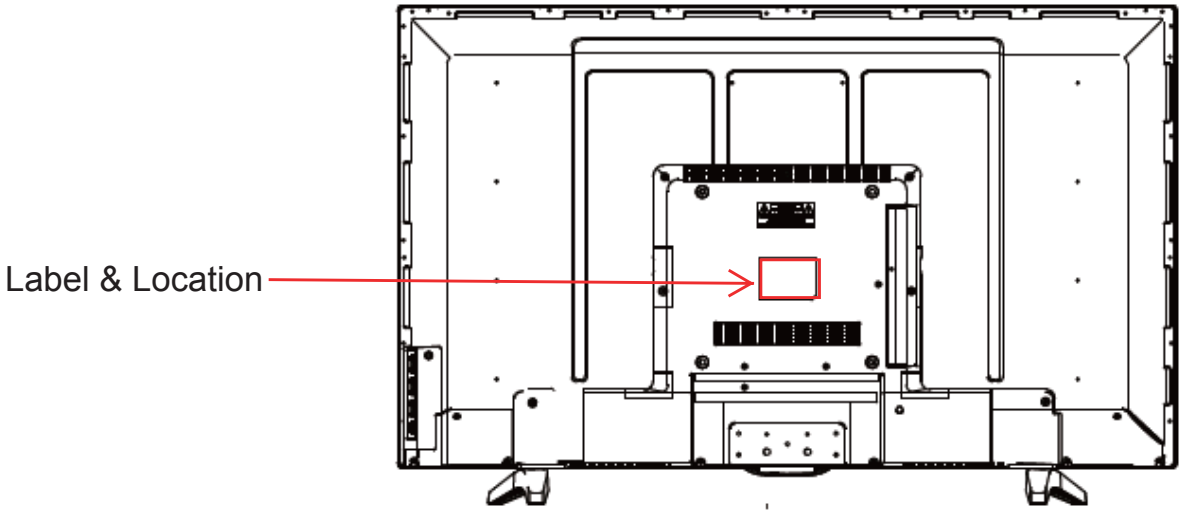
Label & Location