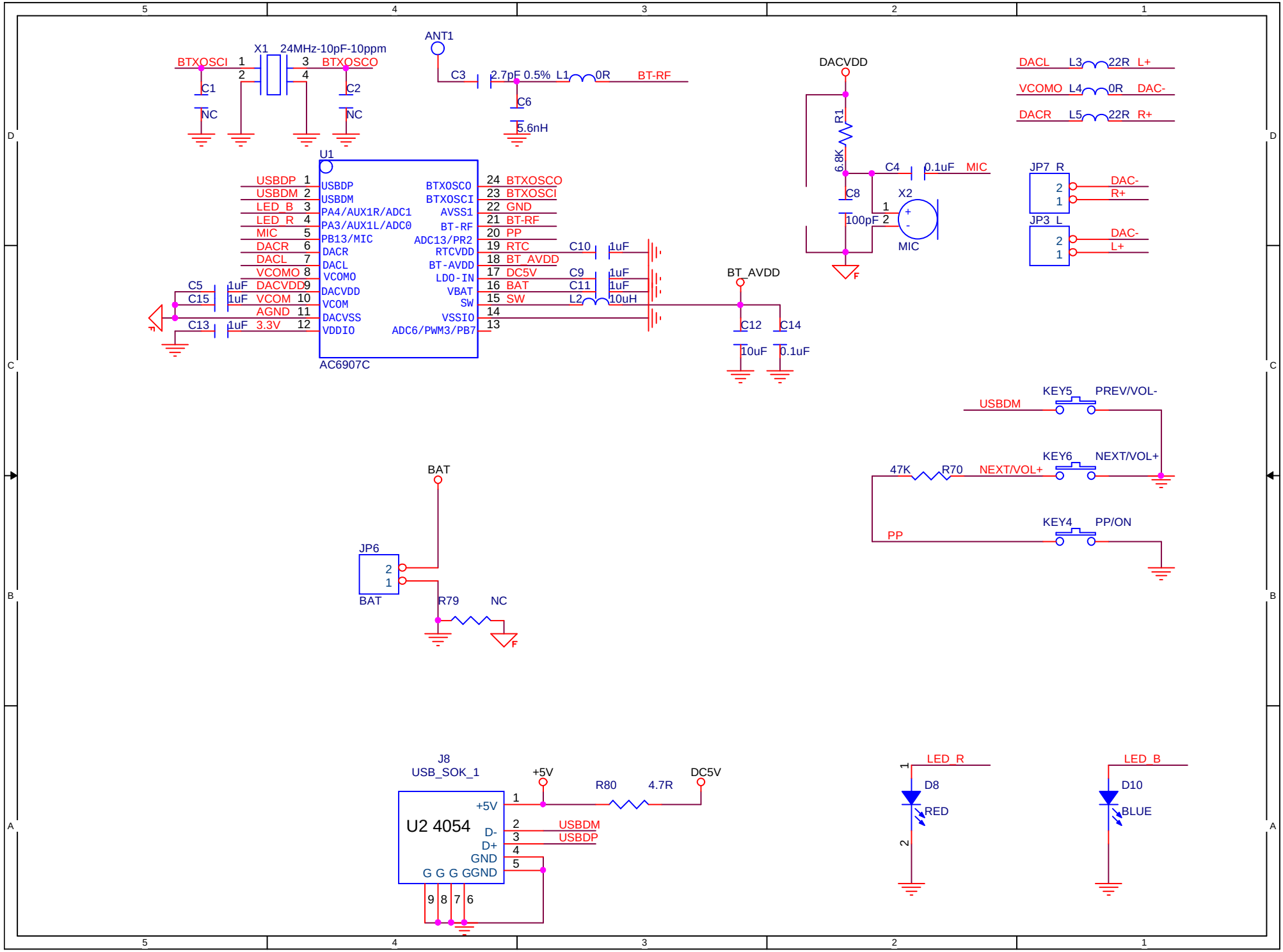
X1 24MHz-10pF-10ppm
BTXOSCI
BTXOSCO
C1
C2
NC
NC
ANT1
C3
2.7pF 0.5%
L1
0R
BT-RF
C6
5.6nH
U1
USBDP 1
USBDM 2
LED_B 3
LED_R 4
MIC 5
DACR 6
DACL 7
VCOMO 8
DACVDD 9
VCOM 10
AGND 11
3.3V 12
USBDP
USBDM
PA4/AUX1R/ADC1
PA3/AUX1L/ADC0
PB13/MIC
DACR
DACL
VCOMO
DACVDD
VCOM
DACVSS
VDDIO
BTXOSCO
BTXOSCI
AVSS1
BT-RF
ADC13/PR2
RTCVDD
BT-AVDD
LDO-IN
VBAT
SW
VSSIO
ADC6/PWM3/PB7
24 BTXOSCO
23 BTXOSCI
22 GND
21 BT-RF
20 PP
19 RTC
18 BT_AVDD
17 DC5V
16 BAT
15 SW
14
13
AC6907C
C5 1uF
C15 1uF
C13 1uF
C10 1uF
C9 1uF
C11 1uF
L2 10uH
BT_AVDD
C12 10uF
C14 0.1uF
DACVDD
R1 6.8K
C8 100pF
C4 0.1uF MIC
X2
MIC
DACL L3 22R L+
VCOMO L4 0R DAC-
DACR L5 22R R+
JP7_R
DAC-
R+
JP3_L
DAC-
L+
KEY5 PREV/VOL-
USBDM
KEY6 NEXT/VOL+
47K R70 NEXT/VOL+
KEY4 PP/ON
PP
BAT
JP6
BAT
R79 NC
J8
USB_SOK_1
U2 4054
+5V
D-
D+
GND
G G G GGND
+5V
R80 4.7R
DC5V
USBDM
USBDP
LED_R
D8
RED
LED_B
D10
BLUE