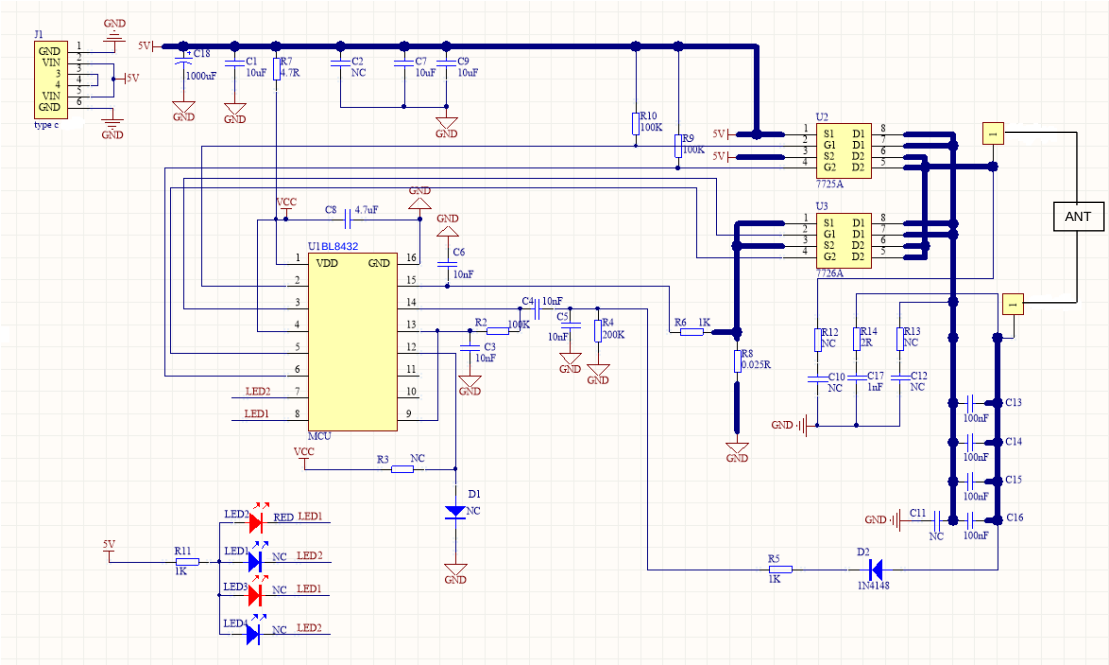
J1
GND
VIN
VIN
GND
type c
5V
C18
1000uF
C1
10uF
R7
4.7R
C2
NC
C7
10uF
C9
10uF
R10
100K
R9
100K
U2
S1
G1
S2
G2
D1
D1
D2
D2
7725A
U3
7726A
ANT
VCC
C8
4.7uF
C6
10nF
U1BL8432
VDD
GND
MCU
LED2
LED1
C4
10nF
C5
10nF
R2
100K
C3
10nF
R4
200K
R6
1K
R8
0.025R
R12
NC
R14
2R
R13
NC
C10
NC
C17
1nF
C12
NC
C13
100nF
C14
100nF
C15
100nF
C16
100nF
C11
NC
R3
NC
D1
NC
R11
1K
LED3
LED4
RED
NC
R5
1K
D2
1N4148