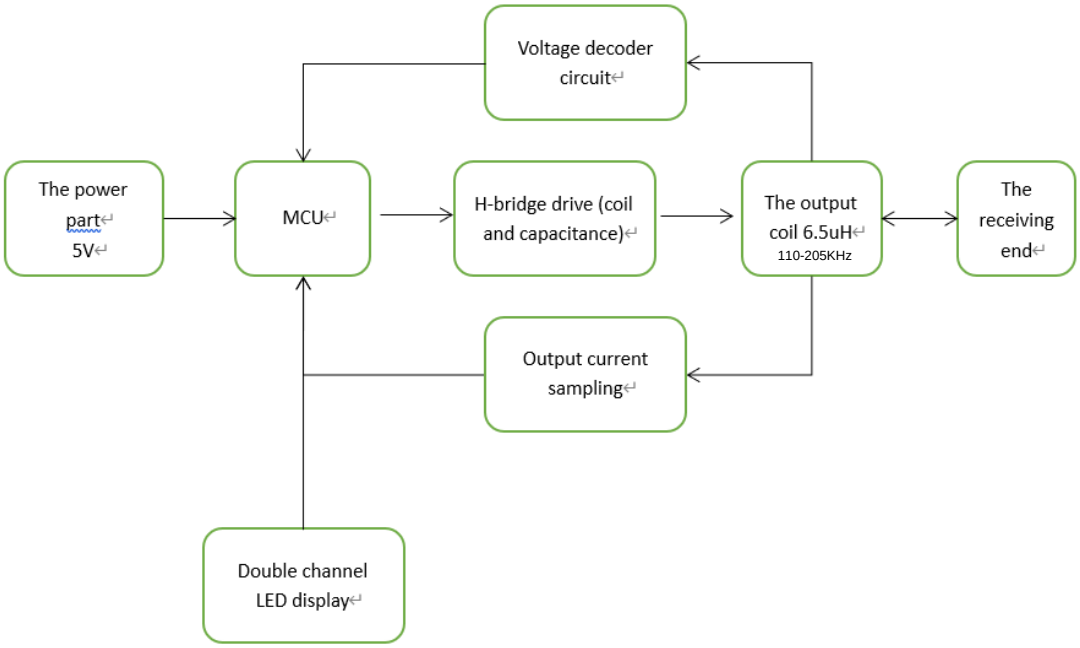
Voltage decoder circuit
The power part 5V
MCU
H-bridge drive (coil and capacitance)
The output coil 6.5uH
110-205KHz
The receiving end
Output current sampling
Double channel LED display