49.860MHZ

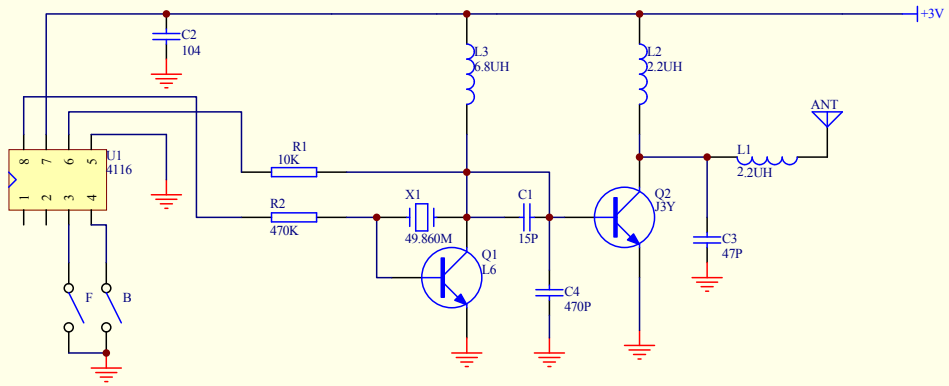

Title		
Size A4	Number	Revision
Date: 20-Nov-2018		Sheet of
File: E:\		