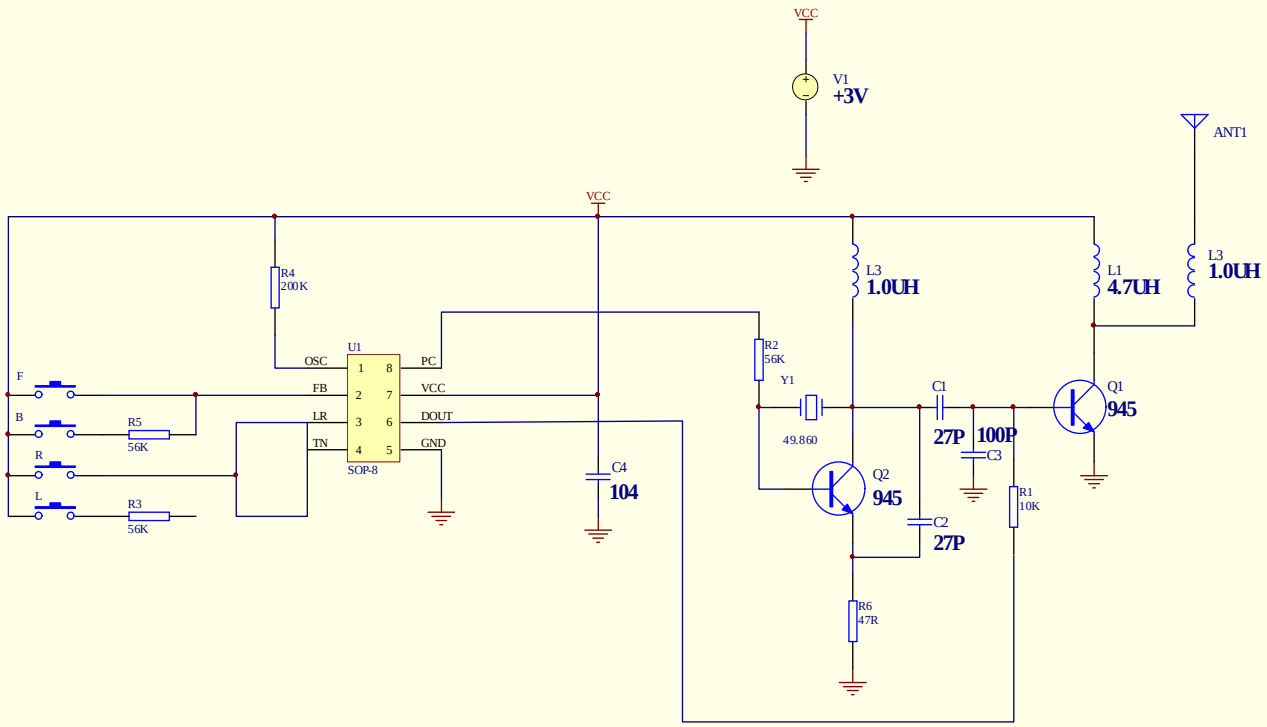

Title		
Size B	Number	Revision
Date: 28-May-2016	Sheet of	