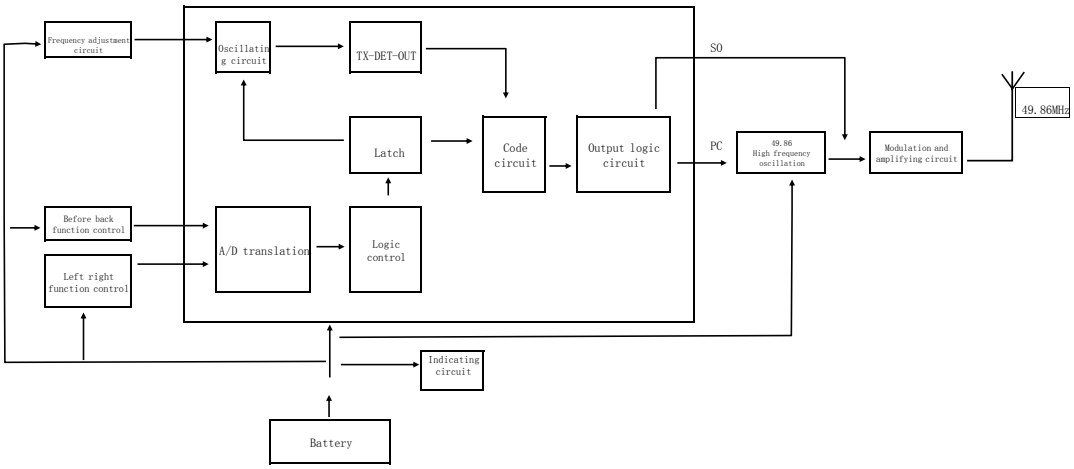
Frequency adjustment circuit
Oscillating circuit
TX-DET-OUT
SO
Latch
Code circuit
Output logic circuit
PC
49.86 High frequency oscillation
Modulation and amplifying circuit
49.86MHz
Before back function control
Left right function control
A/D translation
Logic control
Indicating circuit
Battery