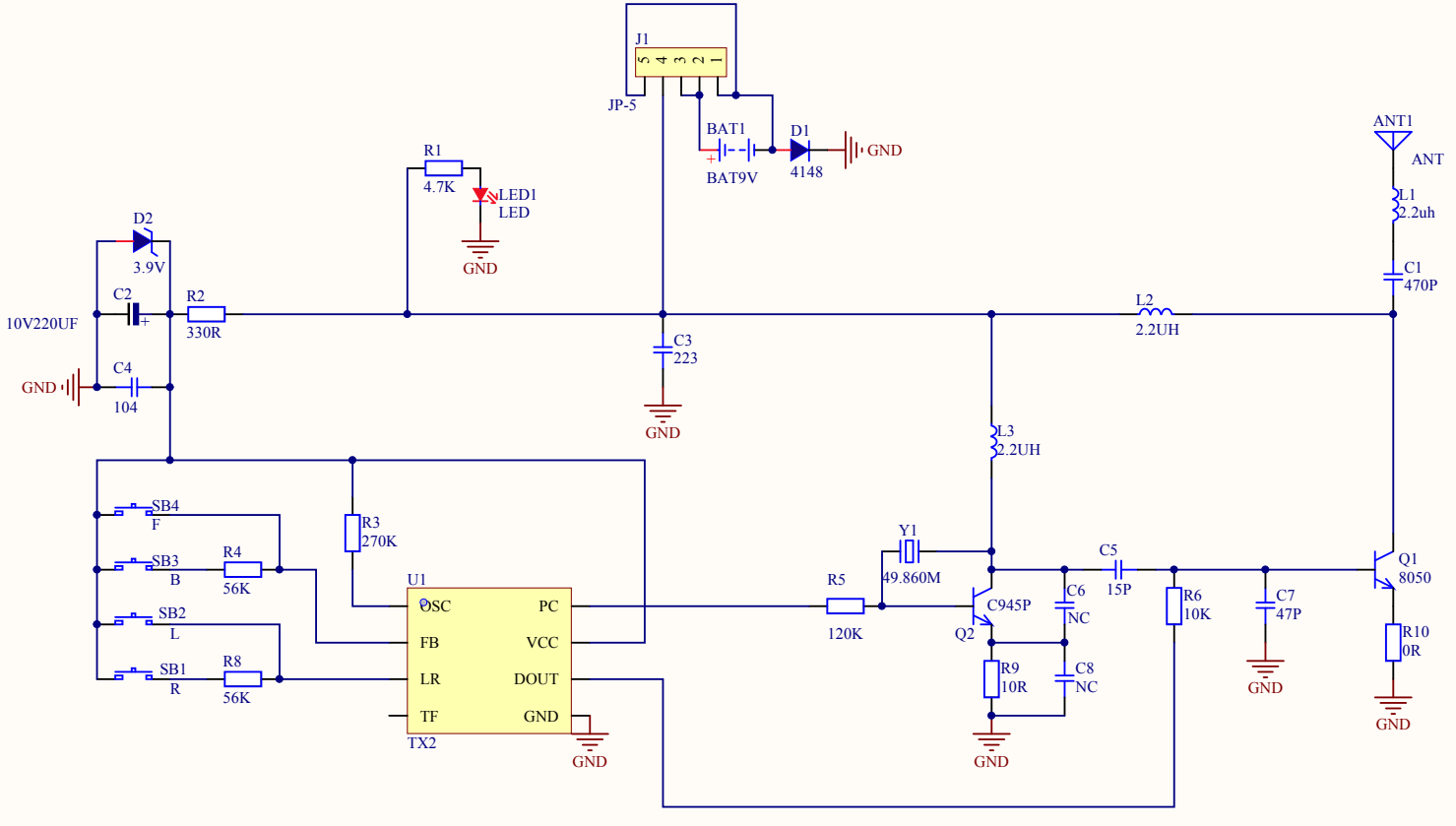

Title	49M TX	
Size A4	Number	Revision
Date: 2016/8/24		Sheet of
File:		Drawn By: