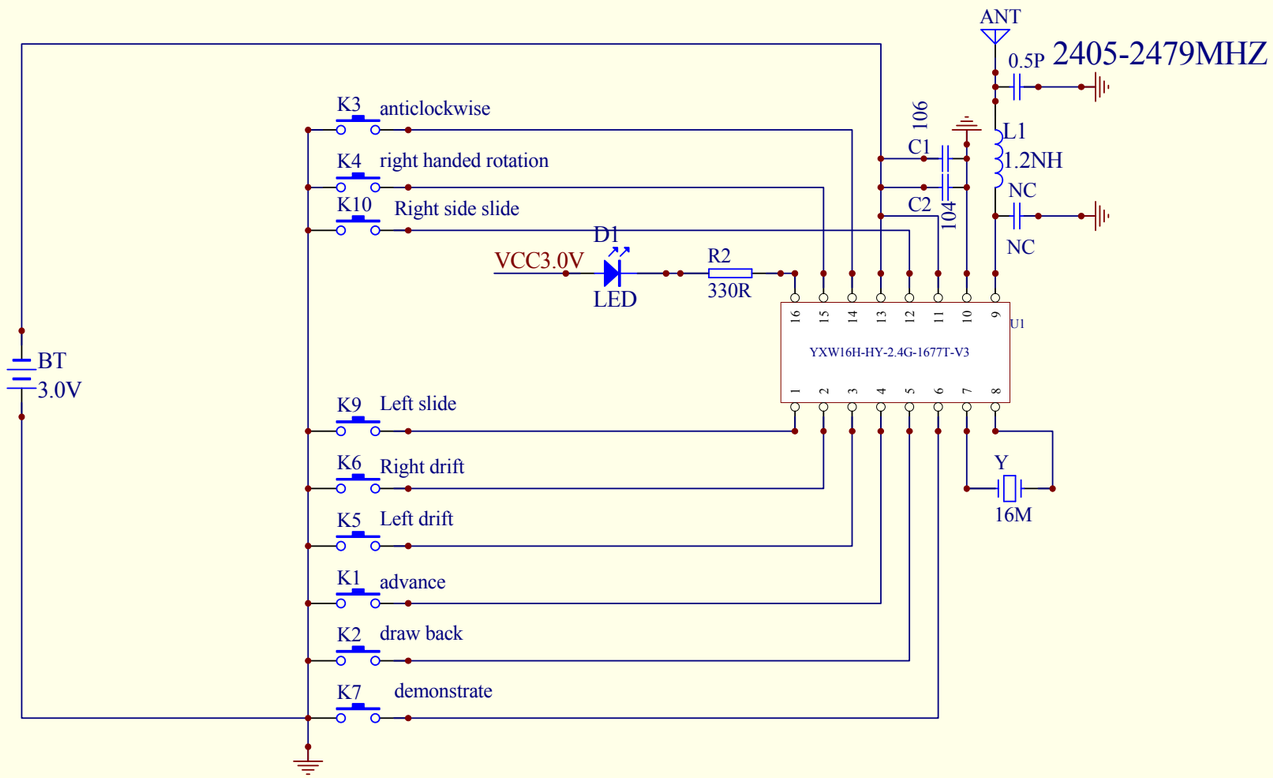

Title		
Size B	Number	Revision
Date: 20-May-2020	Sheet of	
File: D:\金之乐\已经修改3755\HY3755R改为双面板\HY-3755R 改IC.DDB	Drawn By:	